FUJITSU

FOUR ROOM MULTI
INVERTER SYSTEM

SERVICE MANUAL

Refrigerant
R410A

Outdoor unit
AOYG30LAT4

Indoor unit
ASYG07LJCA
ASYG09LJCA
ASYG12LJCA
ASYG07LUCA
ASYG09LUCA
ASYG12LUCA
ASYG14LUCA
ASYG07LMCA
ASYG09LMCA
ASYG12LMCA
ASYG14LMCA
ASYG18LFCA
ASYG24LFCA
ASYG24LFCC
AUYG07LVLA
AUYG09LVLA
AUYG12LVLA
AUYG14LVLA
AUYG18LVLA
AUYG12LVLB
AUYG14LVLB
AUYG18LVLB
UTG-UFYD-W
AGYG09LVCA
AGYG12LVCA
AGYG14LVCA
ARYG07LLTA
ARYG09LLTA
ARYG12LLTA
ARYG14LLTA
ARYG18LLTA
ARYG12LLTB
ARYG14LLTB
ARYG18LLTB
ABYG14LVTA
ABYG18LVTA
ABYG18LVTB

under confirmation

CONTENTS

SPECIFICATIONS 1
DIMENSIONS. 9
REFRIGERANT SYSTEM DIAGRAM . . . 18
CIRCUIT DIAGRAM 19
OUTDOOR PCB CIRCUIT DIAGRAM. . . 27
INDOOR PCB CIRCUIT DIAGRAM. 30
ERROR DETECTION. 53
PARTS (OUTDOOR UNIT) 55
PARTS (INDOOR UNIT) 60
ACCESSORIES 98

FUJITSU GENERAL LIMITED

SPECIFICATIONS

OUTDOOR UNIT

ELECTRICAL SPECIFICATIONS

TYPE		Four room multi inverter
MODEL NAME		AOYG30LAT4
COOLING CAPACITY		8.0 kW
HEATING CAPACITY		9.6 kW
POWER SUPPLY		230 V
FREQUENCY		50 Hz
RUNNING CURRENT	Cooling	9.7 A
	Heating	10.5 A
INPUT	Cooling	2.22 kW
	Heating	2.40 kW
E.E.R.	Cooling	3.60 kW/kW
	Heating	4.00 kW/kW
AIR CIRCULATION HIGH	Cooling	3,500 m3/hr
	Heating	3,300 m3/hr

FAN MOTOR

DISCRIMINATION	MFE-60TVT
COOLING	820 r.p.m.
HEATING	780 r.p.m.

NOISE LEVEL

COOLING	50dB
HEATING	51dB

COMPRESSOR AND REFRIGERANT

TYPE		Hermetic type, Inverter, 4 poles, 3-phase, DC motor, Twin Rotary
DISCRIMINATION		TNB220FPBMT
WEIGHT (with oil)		14.3 kg
PRECHARGED REFRIGERANT		3,300 g
REFRIGERANT TYPE		R410A
FULL CHARGE Total Pipe Length	50 m	3,300 g
	60 m	3,550 g
	70 m	3,800 g
ADDITIONAL CHARGE		25 g/m
MAXIMUM PIPE LENGTH (total)		70 m
MINIMUM PIPE LENGTH (total)		20 m
MAXIMUM PIPE LENGTH (each unit)		25 m
MINIMUM PIPE LENGTH (each unit)		5 m
MAX ELEVATION (between indoor units)		10 m
(between indoor and outdoor units)		15 m

MEASUREMENT

DIMENSIONS	H x W x D	830 x 900 x 330 mm
WEIGHT	Net / Shipping	68 kg / 75 kg

INDOOR UNIT
COMPACT WALL MOUNTED

ELECTRICAL DATA

MODEL NAME	ASYG07LJCA	ASYG09LJCA	ASYG12LJCA
CAPACITY	2.0 kW class	2.5 kW class	3.5 kW class

FAN MOTOR

DISCRIMINATION			MFD-12TYAN		
FAN SPEED	Cooling	High	1,050 r.p.m.	1,100 r.p.m.	1,200 r.p.m.
		Medium	950 r.p.m.	980 r.p.m.	1,050 r.p.m.
		Low	850 r.p.m.	850 r.p.m.	880 r.p.m.
		Quiet	710 r.p.m.	710 r.p.m.	710 r.p.m.
	Heating	High	1,050 r.p.m.	1,100 r.p.m.	1,200 r.p.m.
		Medium	950 r.p.m.	980 r.p.m.	1,050 r.p.m.
		Low	850 r.p.m.	850 r.p.m.	910 r.p.m.
		Quiet	720 r.p.m.	720 r.p.m.	720 r.p.m.
AIR FLOW	Cooling	High	560 m^3/h	600 m^3/h	660 m^3/h
		Medium	500 m^3/h	520 m^3/h	560 m^3/h
		Low	430 m^3/h	430 m^3/h	450 m^3/h
		Quiet	340 m^3/h	340 m^3/h	340 m^3/h
	Heating	High	560 m^3/h	600 m^3/h	660 m^3/h
		Medium	500 m^3/h	520 m^3/h	560 m^3/h
		Low	430 m^3/h	430 m^3/h	470 m^3/h
		Quiet	350 m^3/h	350 m^3/h	350 m^3/h
NOISE LEVEL	Cooling	High	36 dB(A)	37 dB(A)	40 dB(A)
		Medium	32 dB(A)	33 dB(A)	36 dB(A)
		Low	29 dB(A)	29 dB(A)	30 dB(A)
		Quiet	25 dB(A)	25 dB(A)	25 dB(A)
	Heating	High	36 dB(A)	37 dB(A)	40 dB(A)
		Medium	32 dB(A)	33 dB(A)	36 dB(A)
		Low	29 dB(A)	29 dB(A)	31 dB(A)
		Quiet	25 dB(A)	25 dB(A)	25 dB(A)

MEASUREMENTS

DIMENSIONS	H x W x D	280 x 790 x 203 mm
WEIGHT	Net / Shipping	8.0 kg / 10.5 kg

INDOOR UNIT
COMPACT WALL MOUNTED

ELECTRICAL DATA

MODEL NAME	ASYG07LUCA	ASYG09LUCA	ASYG12LUCA	ASYG14LUCA
CAPACITY	2.0 kW class	2.5 kW class	3.5 kW class	4.0 kW class

FAN MOTOR

DISCRIMINATION			MFE-60TVT			
FAN SPEED	Cooling	High	980 r.p.m.	1,030 r.p.m.	1,110 r.p.m.	1,180 r.p.m.
		Medium	910 r.p.m.	950 r.p.m.	1,030 r.p.m.	1,080 r.p.m.
		Low	850 r.p.m.	850 r.p.m.	930 r.p.m.	980 r.p.m.
		Quiet	650 r.p.m.	650 r.p.m.	650 r.p.m.	740 r.p.m.
	Heating	High	980 r.p.m.	1,030 r.p.m.	1,110 r.p.m.	1,180 r.p.m.
		Medium	910 r.p.m.	950 r.p.m.	1,030 r.p.m.	1,080 r.p.m.
		Low	850 r.p.m.	850 r.p.m.	930 r.p.m.	1,010 r.p.m.
		Quiet	650 r.p.m.	650 r.p.m.	650 r.p.m.	790 r.p.m.
AIR FLOW	Cooling	High	570 m^3/h	600 m^3/h	660 m^3/h	710 m^3/h
		Medium	520 m^3/h	550 m^3/h	600 m^3/h	640 m^3/h
		Low	470 m^3/h	470 m^3/h	530 m^3/h	570 m^3/h
		Quiet	330 m^3/h	330 m^3/h	330 m^3/h	390 m^3/h
	Heating	High	570 m^3/h	600 m^3/h	660 m^3/h	710 m^3/h
		Medium	520 m^3/h	550 m^3/h	600 m^3/h	640 m^3/h
		Low	470 m^3/h	470 m^3/h	530 m^3/h	590 m^3/h
		Quiet	330 m^3/h	330 m^3/h	330 m^3/h	430 m^3/h
NOISE LEVEL	Cooling	High	35 dB(A)	36 dB(A)	37 dB(A)	41 dB(A)
		Medium	30 dB(A)	32 dB(A)	34 dB(A)	36 dB(A)
		Low	28 dB(A)	28 dB(A)	31 dB(A)	33 dB(A)
		Quiet	21 dB(A)	21 dB(A)	21 dB(A)	25 dB(A)
	Heating	High	35 dB(A)	36 dB(A)	37 dB(A)	41 dB(A)
		Medium	30 dB(A)	32 dB(A)	34 dB(A)	36 dB(A)
		Low	28 dB(A)	28 dB(A)	31 dB(A)	34 dB(A)
		Quiet	21 dB(A)	21 dB(A)	21 dB(A)	27 dB(A)

MEASUREMENTS

DIMENSIONS	H x W x D	282 x 870 x 185 mm
WEIGHT	Net / Shipping	9.5 kg / 12.0 kg

INDOOR UNIT
COMPACT WALL MOUNTED

ELECTRICAL DATA

MODEL NAME	ASYG07LMCA	ASYG09LMCA	ASYG12LMCA	ASYG14LMCA
CAPACITY	2.0 kW class	2.5 kW class	3.5 kW class	4.0 kW class

FAN MOTOR

DISCRIMINATION			MFD-12CYN	
FAN SPEED	Cooling	High	1,320 r.p.m.	1,360 r.p.m.
		Medium	1,160 r.p.m.	1,220 r.p.m.
		Low	930 r.p.m.	990 r.p.m.
		Quiet	680 r.p.m.	750 r.p.m.
	Heating	High	1,320 r.p.m.	1,360 r.p.m.
		Medium	1,160 r.p.m.	1,220 r.p.m.
		Low	980 r.p.m.	1,040 r.p.m.
		Quiet	710 r.p.m.	790 r.p.m.
AIR FLOW	Cooling	High	600 m^3/h	770 m^3/h
		Medium	550 m^3/h	640 m^3/h
		Low	470 m^3/h	570 m^3/h
		Quiet	330 m^3/h	390 m^3/h
	Heating	High	600 m^3/h	710 m^3/h
		Medium	550 m^3/h	640 m^3/h
		Low	470 m^3/h	590 m^3/h
		Quiet	330 m^3/h	430 m^3/h
NOISE LEVEL	Cooling	High	43 dB(A)	44 dB(A)
		Medium	40 dB(A)	40 dB(A)
		Low	32 dB(A)	33 dB(A)
		Quiet	21 dB(A)	25 dB(A)
	Heating	High	43 dB(A)	44 dB(A)
		Medium	38 dB(A)	40 dB(A)
		Low	33 dB(A)	35 dB(A)
		Quiet	22 dB(A)	27 dB(A)

MEASUREMENTS

DIMENSIONS	H x W x D	268 x 840 x 203 mm
WEIGHT	Net / Shipping	8.5 kg / 10.5 kg

INDOOR UNIT
WALL MOUNTED

under confirmation

ELECTRICAL DATA

MODEL NAME	ASYG18LFCA	ASYG24LFCA	ASYG24LFCC
CAPACITY	5.0 kW class	7.0 kW class	7.0 kW class

FAN MOTOR

DISCRIMINATION			MFD-50RON		MFD-71TXAN
FAN SPEED	Cooling	High	1,250 r.p.m.	1,480 r.p.m.	1,480 r.p.m.
		Medium	1,020 r.p.m.	1,220 r.p.m.	1,220 r.p.m.
		Low	900 r.p.m.	1,020 r.p.m.	1,020 r.p.m.
		Quiet	770 r.p.m.	900 r.p.m.	860 r.p.m.
	Heating	High	1,250 r.p.m.	1,430 r.p.m.	1,480 r.p.m.
		Medium	1,020 r.p.m.	1,220 r.p.m.	1,220 r.p.m.
		Low	900 r.p.m.	1,020 r.p.m.	1,020 r.p.m.
		Quiet	790 r.p.m.	900 r.p.m.	860 r.p.m.
AIR FLOW	Cooling	High	920 m^3/h	1,120 m^3/h	1,120 m^3/h
		Medium	740 m^3/h	900 m^3/h	900 m^3/h
		Low	620 m^3/h	740 m^3/h	740 m^3/h
		Quiet	550 m^3/h	620 m^3/h	620 m^3/h
	Heating	High	920 m^3/h	1100 m^3/h	1100 m^3/h
		Medium	740 m^3/h	900 m^3/h	900 m^3/h
		Low	620 m^3/h	740 m^3/h	740 m^3/h
		Quiet	550 m^3/h	620 m^3/h	620 m^3/h
NOISE LEVEL	Cooling	High	43 dB(A)	49 dB(A)	49 dB(A)
		Medium	37 dB(A)	42 dB(A)	42 dB(A)
		Low	33 dB(A)	37 dB(A)	37 dB(A)
		Quiet	31 dB(A)	33 dB(A)	32 dB(A)
	Heating	High	44 dB(A)	48 dB(A)	48 dB(A)
		Medium	37 dB(A)	42 dB(A)	42 dB(A)
		Low	33 dB(A)	37 dB(A)	37 dB(A)
		Quiet	31 dB(A)	33 dB(A)	32 dB(A)

MEASUREMENTS

DIMENSIONS	H x W x D	320 x 998 x 228 mm
WEIGHT	Net / Shipping	14 kg / 18 kg

INDOOR UNIT
COMPACT CASSETTE

ELECTRICAL DATA

MODEL NAME	AUYG07LVLA	AUYG09LVLA	AUYG12LVLA AUYG12LVLB	AUYG14LVLA AUYG14LVLB	AUYG18LVLA AUYG18LVLB
CAPACITY	2.0 kW class	2.5 kW class	3.5 kW class	4.0 kW class	5.0 kW class

FAN MOTOR

DISCRIMINATION			MFF-24RVL				
FAN SPEED	Cooling	High	590 r.p.m.	590 r.p.m.	660 r.p.m.	730 r.p.m.	790 r.p.m.
		Medium	540 r.p.m.	540 r.p.m.	580 r.p.m.	630 r.p.m.	660 r.p.m.
		Low	490 r.p.m.	490 r.p.m.	520 r.p.m.	540 r.p.m.	570 r.p.m.
		Quiet	440 r.p.m.	440 r.p.m.	460 r.p.m.	460 r.p.m.	460 r.p.m.
	Heating	High	590 r.p.m.	590 r.p.m.	650 r.p.m.	740 r.p.m.	840 r.p.m.
		Medium	540 r.p.m.	540 r.p.m.	580 r.p.m.	670 r.p.m.	750 r.p.m.
		Low	490 r.p.m.	490 r.p.m.	520 r.p.m.	600 r.p.m.	650 r.p.m.
		Quiet	440 r.p.m.	440 r.p.m.	460 r.p.m.	480 r.p.m.	500 r.p.m.
AIR FLOW	Cooling	High	540 m^3/h	540 m^3/h	610 m^3/h	680 m^3/h	750 m^3/h
		Medium	490 m^3/h	490 m^3/h	530 m^3/h	580 m^3/h	610 m^3/h
		Low	440 m^3/h	440 m^3/h	470 m^3/h	490 m^3/h	520 m^3/h
		Quiet	390 m^3/h	390 m^3/h	410 m^3/h	410 m^3/h	410 m^3/h
	Heating	High	540 m^3/h	540 m^3/h	610 m^3/h	700 m^3/h	800 m^3/h
		Medium	490 m^3/h	490 m^3/h	530 m^3/h	620 m^3/h	710 m^3/h
		Low	440 m^3/h	440 m^3/h	470 m^3/h	550 m^3/h	600 m^3/h
		Quiet	390 m^3/h	390 m^3/h	410 m^3/h	430 m^3/h	450 m^3/h
NOISE LEVEL	Cooling	High	33 dB(A)	33 dB(A)	37 dB(A)	40 dB(A)	42 dB(A)
		Medium	31 dB(A)	31 dB(A)	33 dB(A)	35 dB(A)	37 dB(A)
		Low	29 dB(A)	29 dB(A)	31 dB(A)	32 dB(A)	33 dB(A)
		Quiet	27 dB(A)	27 dB(A)	28 dB(A)	29 dB(A)	29 dB(A)
	Heating	High	34 dB(A)	34 dB(A)	37 dB(A)	40 dB(A)	44 dB(A)
		Medium	32 dB(A)	32 dB(A)	33 dB(A)	37 dB(A)	40 dB(A)
		Low	29 dB(A)	29 dB(A)	31 dB(A)	34 dB(A)	37 dB(A)
		Quiet	27 dB(A)	27 dB(A)	28 dB(A)	29 dB(A)	30 dB(A)

MEASUREMENTS

DIMENSIONS	H x W x D	245 x 570 x 570 mm
WEIGHT	Net / Shipping	15 kg / 18 kg

PANEL

MEASUREMENTS

MODEL NAME		UTG-UFYD-W
DIMENSIONS	H x W x D	49 x 700 x 700 mm
WEIGHT	Net / Shipping	2.6 kg / 4.5 kg

INDOOR UNIT
FLOOR

ELECTRICAL DATA

MODEL NAME	AGYG09LVCA	AGYG12LVCA	AGYG14LVCA
CAPACITY	2.5 kW class	3.5 kW class	4.0 kW class

FAN MOTOR (upper fan)

DISCRIMINATION			MFD-14TXN		
FAN SPEED	Cooling	High	1,120 r.p.m.	1,240 r.p.m.	1,330 r.p.m.
		Medium	960 r.p.m.	1,050 r.p.m.	1,100 r.p.m.
		Low	820 r.p.m.	860 r.p.m.	890 r.p.m.
		Quiet	660 r.p.m.	660 r.p.m.	660 r.p.m.
	Heating	High	1,120 r.p.m.	1,240 r.p.m.	1,330 r.p.m.
		Medium	1,000 r.p.m.	1,080 r.p.m.	1,140 r.p.m.
		Low	860 r.p.m.	910 r.p.m.	940 r.p.m.
		Quiet	660 r.p.m.	660 r.p.m.	660 r.p.m.

FAN MOTOR (lower fan)

DISCRIMINATION			MFD-14SXN		
FAN SPEED	Cooling	High	950 r.p.m.	1,050 r.p.m.	1,120 r.p.m.
		Medium	820 r.p.m.	890 r.p.m.	930 r.p.m.
		Low	700 r.p.m.	730 r.p.m.	750 r.p.m.
		Quiet	560 r.p.m.	560 r.p.m.	560 r.p.m.
	Heating	High	950 r.p.m.	1,050 r.p.m.	1,120 r.p.m.
		Medium	850 r.p.m.	920 r.p.m.	970 r.p.m.
		Low	730 r.p.m.	770 r.p.m.	800 r.p.m.
		Quiet	560 r.p.m.	560 r.p.m.	560 r.p.m.

2 FAN RUNNING

AIR CIRCULATION HIGH	Cooling	High	570 m3/hr	570 m3/hr	650 m3/hr
		Medium	460 m3/hr	460 m3/hr	520 m3/hr
		Low	390 m3/hr	360 m3/hr	400 m3/hr
		Quiet	270 m3/hr	270 m3/hr	270 m3/hr
	Heating	High	600 m3/hr	600 m3/hr	650 m3/hr
		Medium	480 m3/hr	480 m3/hr	520 m3/hr
		Low	370 m3/hr	370 m3/hr	390 m3/hr
		Quiet	270 m3/hr	270 m3/hr	270 m3/hr
NOISE LEVEL	Cooling	High	39 dB(A)	42 dB(A)	44 dB(A)
		Medium	34 dB(A)	36 dB(A)	38 dB(A)
		Low	28 dB(A)	30 dB(A)	31 dB(A)
		Quiet	22 dB(A)	22 dB(A)	22 dB(A)
	Heating	High	39 dB(A)	42 dB(A)	44 dB(A)
		Medium	35 dB(A)	38 dB(A)	39 dB(A)
		Low	30 dB(A)	32 dB(A)	33 dB(A)
		Quiet	22 dB(A)	22 dB(A)	22 dB(A)

MEASUREMENT

DIMENSIONS H x W x D	600 x 740 x 200 mm
WEIGHT Net / Shipping	14 kg / 17 kg

INDOOR UNIT
SLIM DUCT

ELECTRICAL DATA

MODEL NAME	ARYG07LLTA	ARYG09LLTA	ARYG12LLTA ARYG12LLTB	ARYG14LLTA ARYG14LLTB	ARYG18LLTA ARYG18LTB
CAPACITY	2.0 kW class	2.5 kW class	3.5 kW class	4.0 kW class	5.0 kW class

FAN MOTOR

DISCRIMINATION			MFG-14WV				MFG-24WV
FAN SPEED	Cooling	High	1,160 r.p.m.	1,260 r.p.m.	1,340 r.p.m.	1,560 r.p.m.	1,380 r.p.m.
		Medium	1,000 r.p.m.	1,160 r.p.m.	1,240 r.p.m.	1,400 r.p.m.	1,300 r.p.m.
		Low	940 r.p.m.	1,060 r.p.m.	1,140 r.p.m.	1,240 r.p.m.	1,220 r.p.m.
		Quiet	880 r.p.m.	960 r.p.m.	1,030 r.p.m.	1,030 r.p.m.	1,140 r.p.m.
	Heating	High	1,160 r.p.m.	1,260 r.p.m.	1,340 r.p.m.	1,560 r.p.m.	1,380 r.p.m.
		Medium	1,000 r.p.m.	1,160 r.p.m.	1,240 r.p.m.	1,400 r.p.m.	1,300 r.p.m.
		Low	940 r.p.m.	1,060 r.p.m.	1,140 r.p.m.	1,240 r.p.m.	1,220 r.p.m.
		Quiet	880 r.p.m.	960 r.p.m.	1,030 r.p.m.	1,030 r.p.m.	1,140 r.p.m.
AIR FLOW	Cooling	High	550 m^3/h	600 m^3/h	650 m^3/h	800 m^3/h	940 m^3/h
		Medium	490 m^3/h	550 m^3/h	600 m^3/h	700 m^3/h	880 m^3/h
		Low	470 m^3/h	500 m^3/h	550 m^3/h	600 m^3/h	820 m^3/h
		Quiet	440 m^3/h	450 m^3/h	480 m^3/h	480 m^3/h	750 m^3/h
	Heating	High	550 m^3/h	600 m^3/h	650 m^3/h	800 m^3/h	940 m^3/h
		Medium	490 m^3/h	550 m^3/h	600 m^3/h	700 m^3/h	880 m^3/h
		Low	470 m^3/h	500 m^3/h	550 m^3/h	600 m^3/h	820 m^3/h
		Quiet	440 m^3/h	450 m^3/h	480 m^3/h	480 m^3/h	750 m^3/h
NOISE LEVEL	Cooling	High	28 dB(A)	28 dB(A)	29 dB(A)	32 dB(A)	32 dB(A)
		Medium	26 dB(A)	27 dB(A)	28 dB(A)	30 dB(A)	31 dB(A)
		Low	25 dB(A)	26 dB(A)	27 dB(A)	28 dB(A)	30 dB(A)
		Quiet	24 dB(A)	25 dB(A)	26 dB(A)	26 dB(A)	29 dB(A)
	Heating	High	28 dB(A)	28 dB(A)	29 dB(A)	33 dB(A)	33 dB(A)
		Medium	26 dB(A)	26 dB(A)	28 dB(A)	30 dB(A)	32 dB(A)
		Low	25 dB(A)	25 dB(A)	27 dB(A)	28 dB(A)	31 dB(A)
		Quiet	24 dB(A)	24 dB(A)	24 dB(A)	25 dB(A)	29 dB(A)

MEASUREMENTS

DIMENSIONS	H x W x D	198 x 700 x 620 mm	198 x 900 x 620 mm
WEIGHT	Net / Shipping	19 kg / 25 kg	23 kg / 29 kg

INDOOR UNIT
FLOOR / CEILING

ELECTRICAL DATA

MODEL NAME	ABYG14LVTA	ABYG18LVTA ABYG18LVTB
CAPACITY	4.0 kW class	5.00 kW class

FAN MOTOR

DISCRIMINATION			MFH-24RVL	
FAN SPEED	Cooling	High	1,380 r.p.m.	1,460 r.p.m.
		Medium	1,300 r.p.m.	1,360 r.p.m.
		Low	1,220 r.p.m.	1,260 r.p.m.
		Quiet	1,140 r.p.m.	1,180 r.p.m.
	Heating	High	1,380 r.p.m.	1,460 r.p.m.
		Medium	1,300 r.p.m.	1,360 r.p.m.
		Low	1,220 r.p.m.	1,260 r.p.m.
		Quiet	1,140 r.p.m.	1,180 r.p.m.
AIR FLOW	Cooling	High	940 m^3/h	1330 m^3/h
		Medium	880 m^3/h	1240 m^3/h
		Low	820 m^3/h	1100 m^3/h
		Quiet	750 m^3/h	1030 m^3/h
	Heating	High	940 m^3/h	1330 m^3/h
		Medium	880 m^3/h	1240 m^3/h
		Low	820 m^3/h	1100 m^3/h
		Quiet	750 m^3/h	1030 m^3/h
NOISE LEVEL	Cooling	High	32 dB(A)	33 dB(A)
		Medium	31 dB(A)	32 dB(A)
		Low	30 dB(A)	30 dB(A)
		Quiet	29 dB(A)	29 dB(A)
	Heating	High	33 dB(A)	35 dB(A)
		Medium	32 dB(A)	34 dB(A)
		Low	31 dB(A)	32 dB(A)
		Quiet	29 dB(A)	29 dB(A)

MEASUREMENTS

DIMENSIONS	H x W x D	199 x 990 x 655 mm
WEIGHT	Net / Shipping	27 kg / 36 kg

DIMENSIONS

OUTDOOR UNIT

Unit : mm

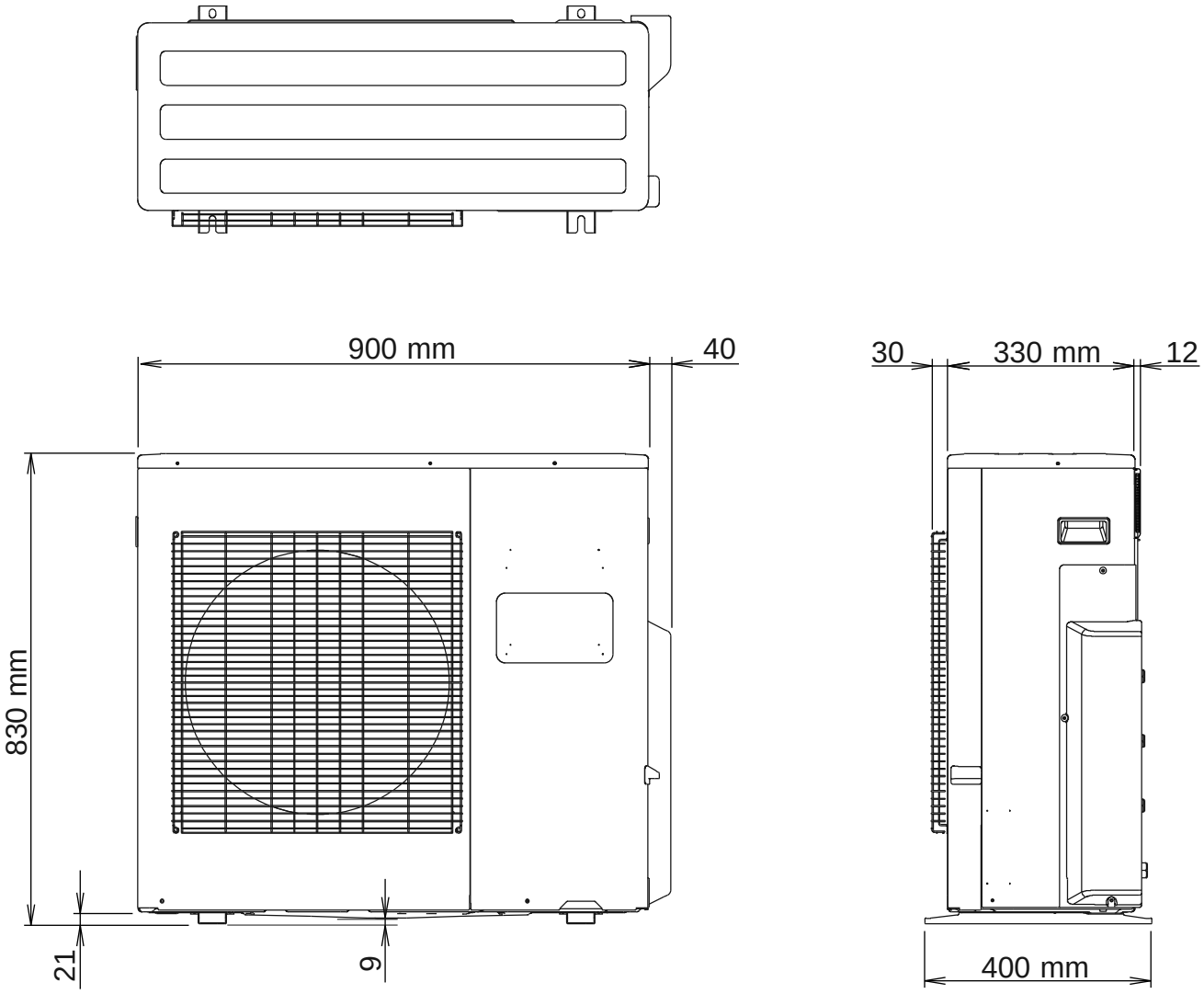

INDOOR UNIT
COMPACT WALL MOUNTED
ASYG07LJCA
ASYG09LJCA
ASYG12LJCA

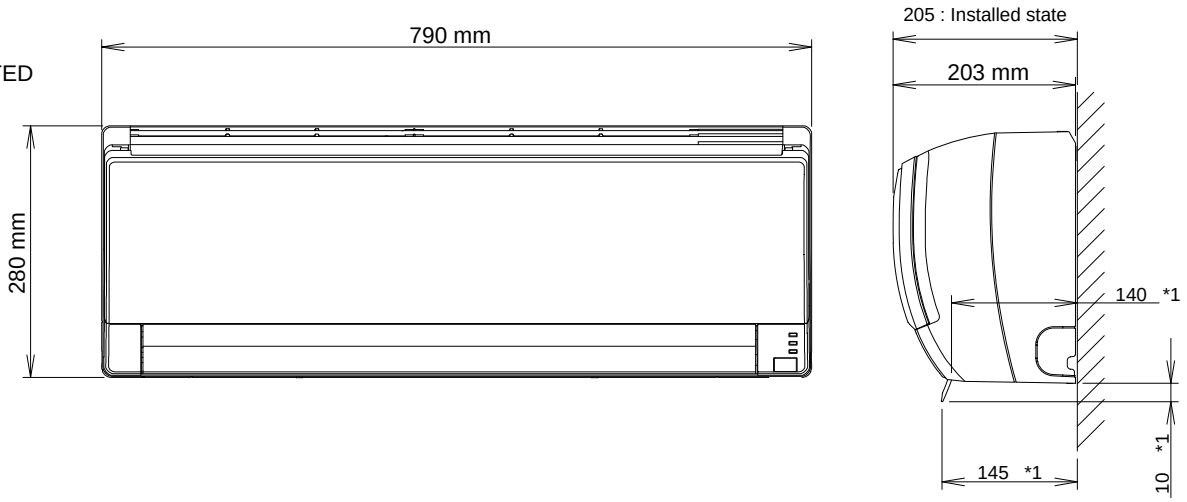

*1: Vertical flap is downward

INDOOR UNIT
COMPACT WALL MOUNTED
ASYG07LUCA
ASYG09LUCA
ASYG12LUCA
ASYG14LUCA

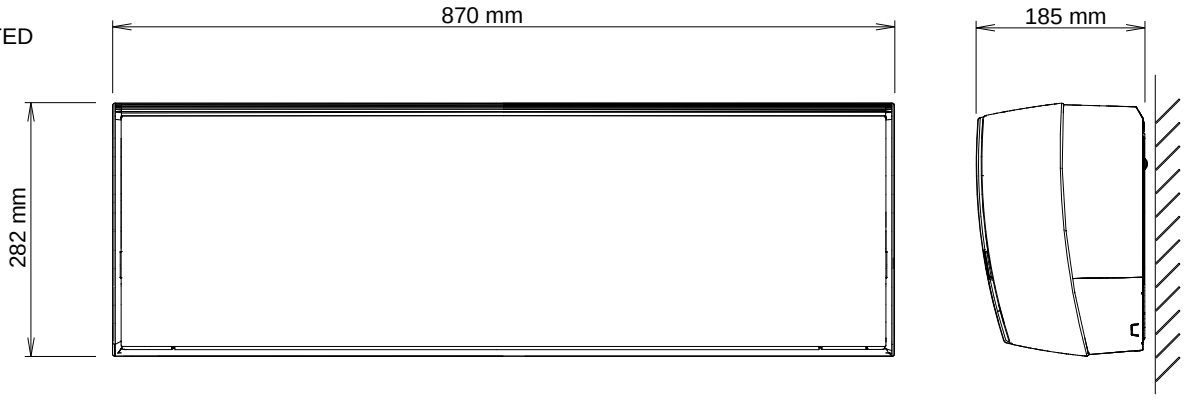

Drain hose length : 600 mm

INDOOR UNIT
COMPACT WALL MOUNTED
ASYG07LMCA
ASYG09LMCA
ASYG12LMCA
ASYG14LMCA

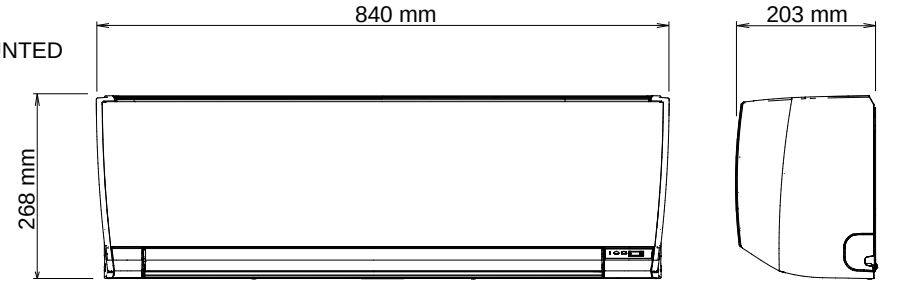

Drain hose

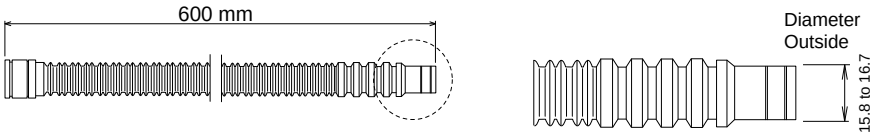

Inside : 13.8 mm

INDOOR UNIT
WALL MOUNTED
ASYG18LFCA
ASYG24LFCA
ASYG24LFCC

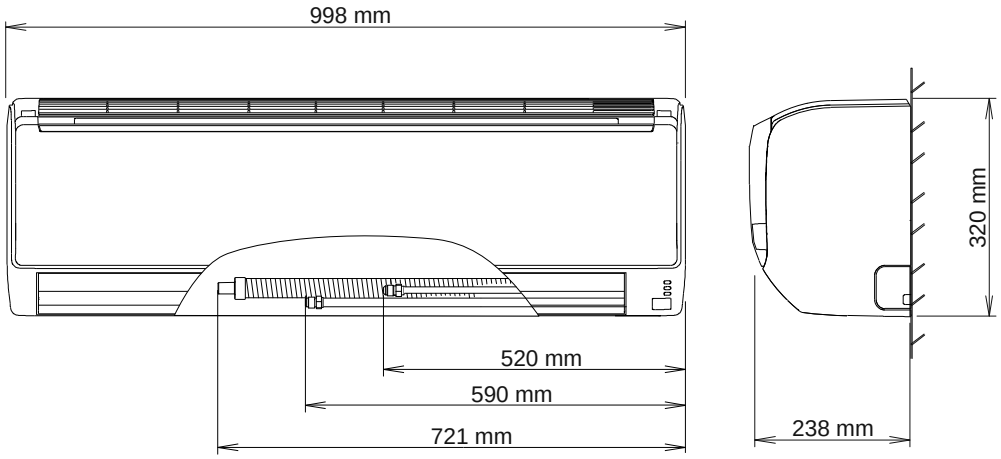

INDOOR UNIT
COMPACT CASSETTE
AUYG07LVLA
AUYG09LVLA
AUYG12LVLA AUYG12LVLB
AUYG14LVLA AUYG14LVLB
AUYG18LVLA AUYG18LVLB

Unit : mm

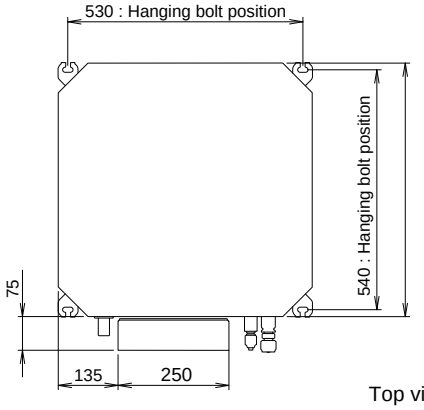

Top view

Decoration panel mounting state

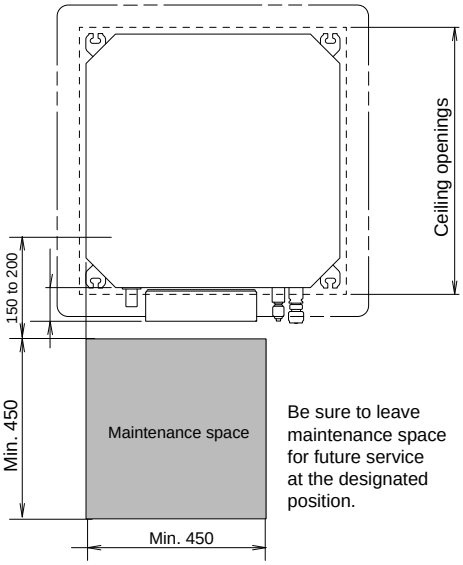

Be sure to leave maintenance space for future service at the designated position.

Bottom view

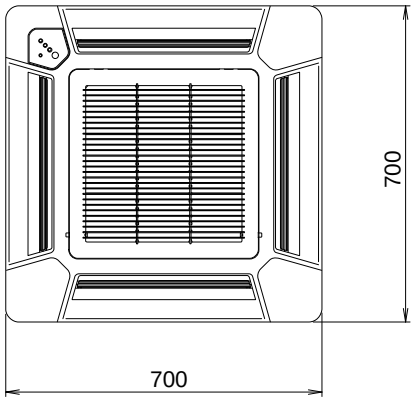

Side view

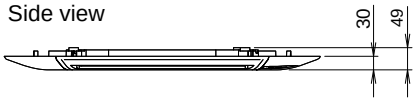

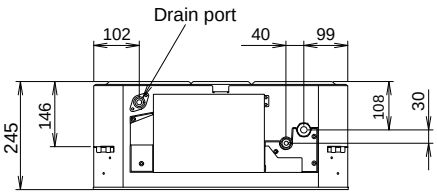

Side view

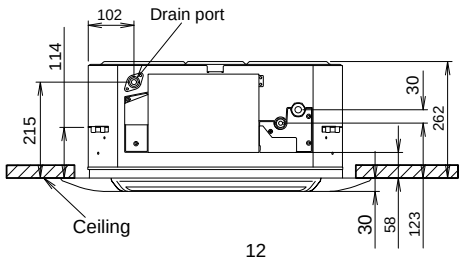

INDOOR UNIT
FLOOR
AGYG09LVCA
AGYG12LVCA
AGYG14LVCA

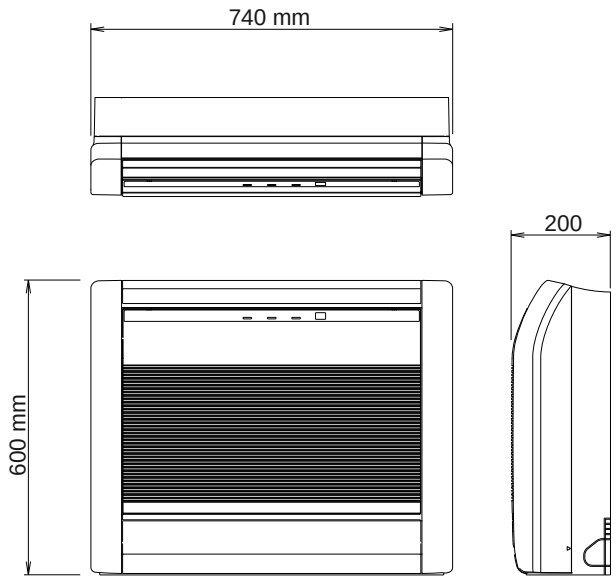

INDOOR UNIT
FLOOR / CEILING
ABYG14LVTA
ABYG18LVTA
ABYG18LVTB

Unit : mm

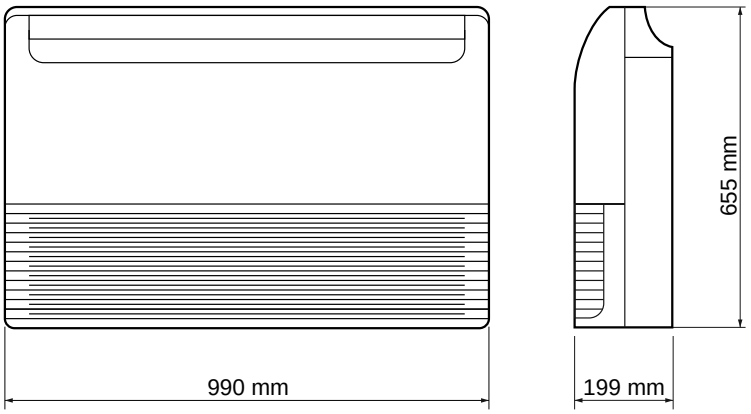

Rear view

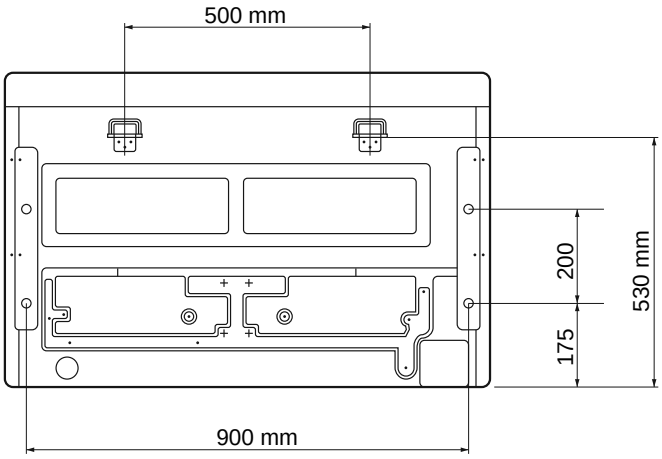

Unit : mm

INDOOR UNIT
SLIM DUCT
ARYG07LLTA
ARYG09LLTA
ARYG12LLTA
ARYG14LLTA
ARYG12LLTB
ARYG14LLTB
(Serial number : T)

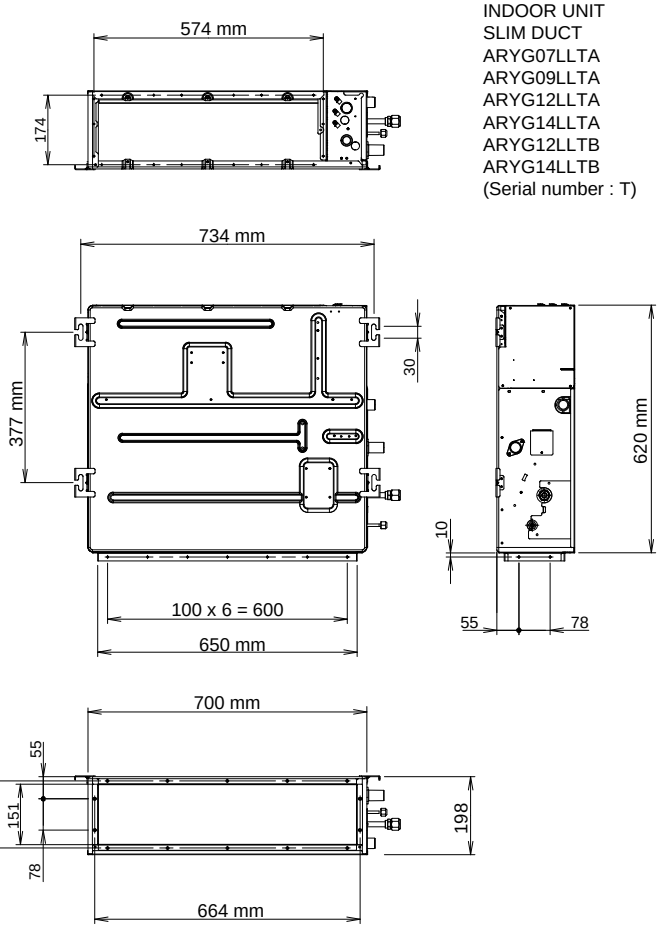

INDOOR UNIT
SLIM DUCT
ARYG18LLTA
ARYG18LLTB
(Serial number : T)

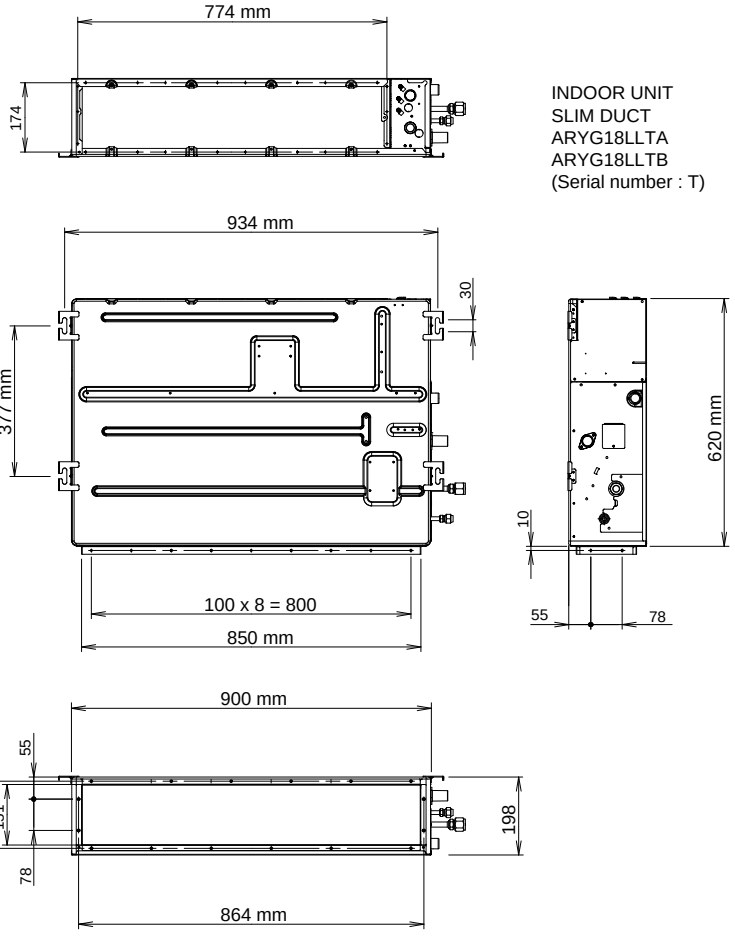

Unit : mm

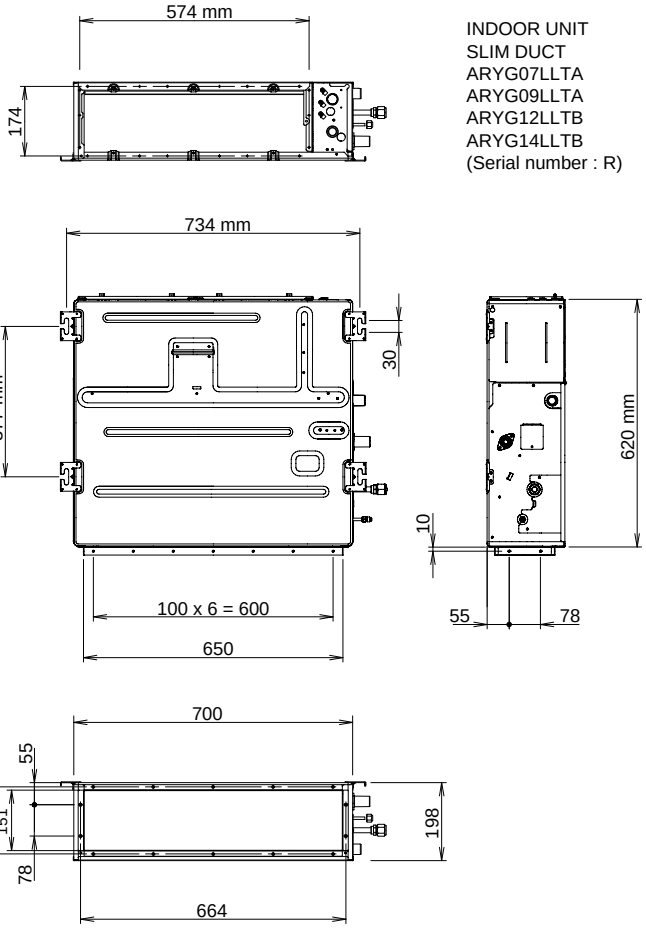

INDOOR UNIT
SLIM DUCT
ARYG07LLTA
ARYG09LLTA
ARYG12LLTB
ARYG14LLTB
(Serial number : R)

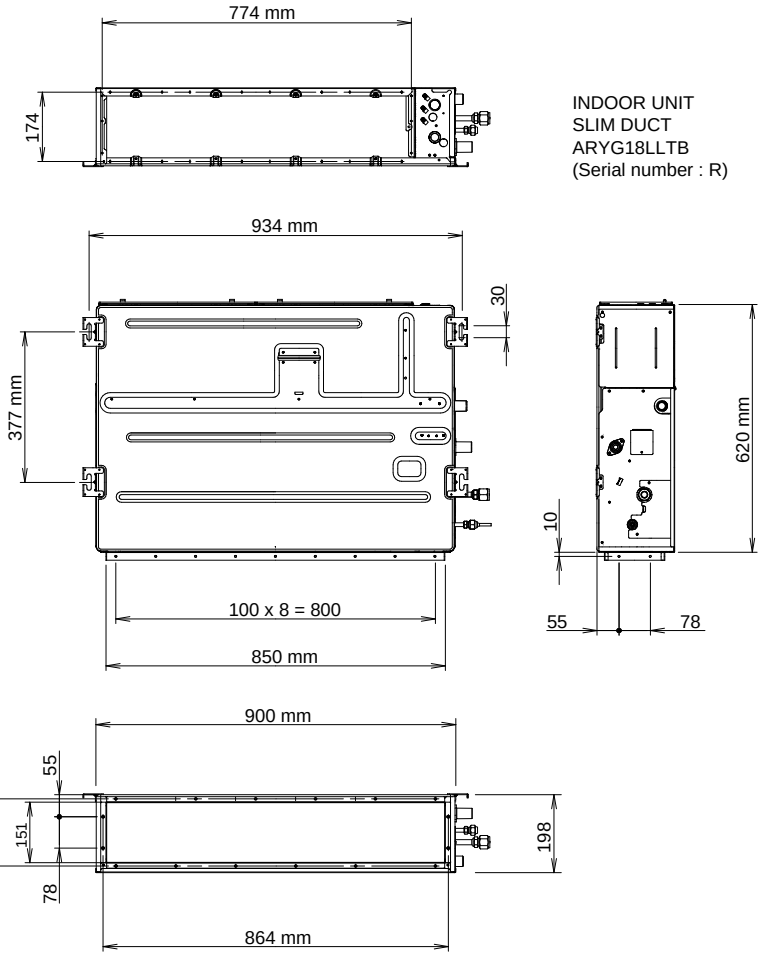

INDOOR UNIT
SLIM DUCT
ARYG18LLTB
(Serial number : R)

REFRIGERANT SYSTEM DIAGRAM

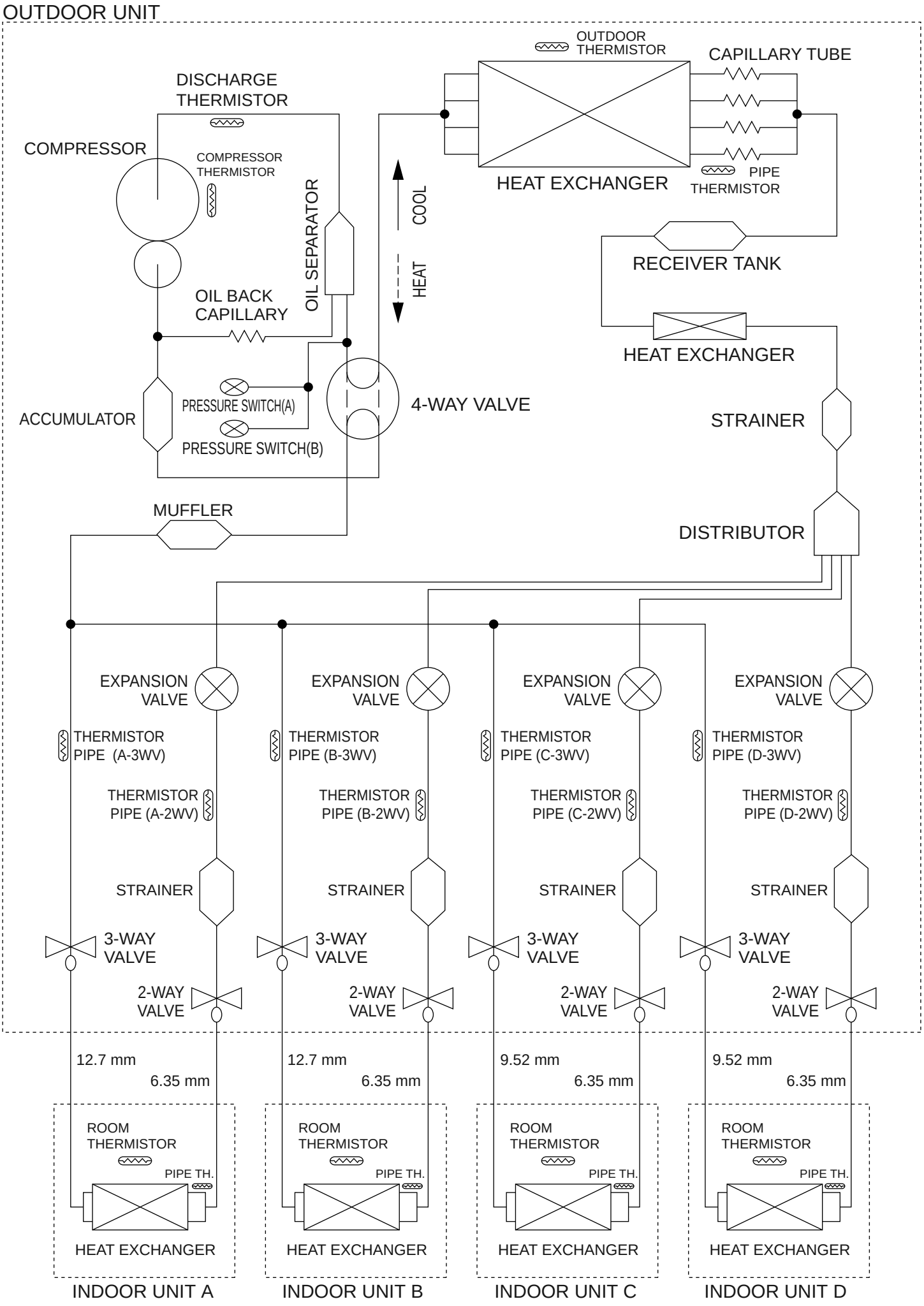

CIRCUIT DIAGRAM

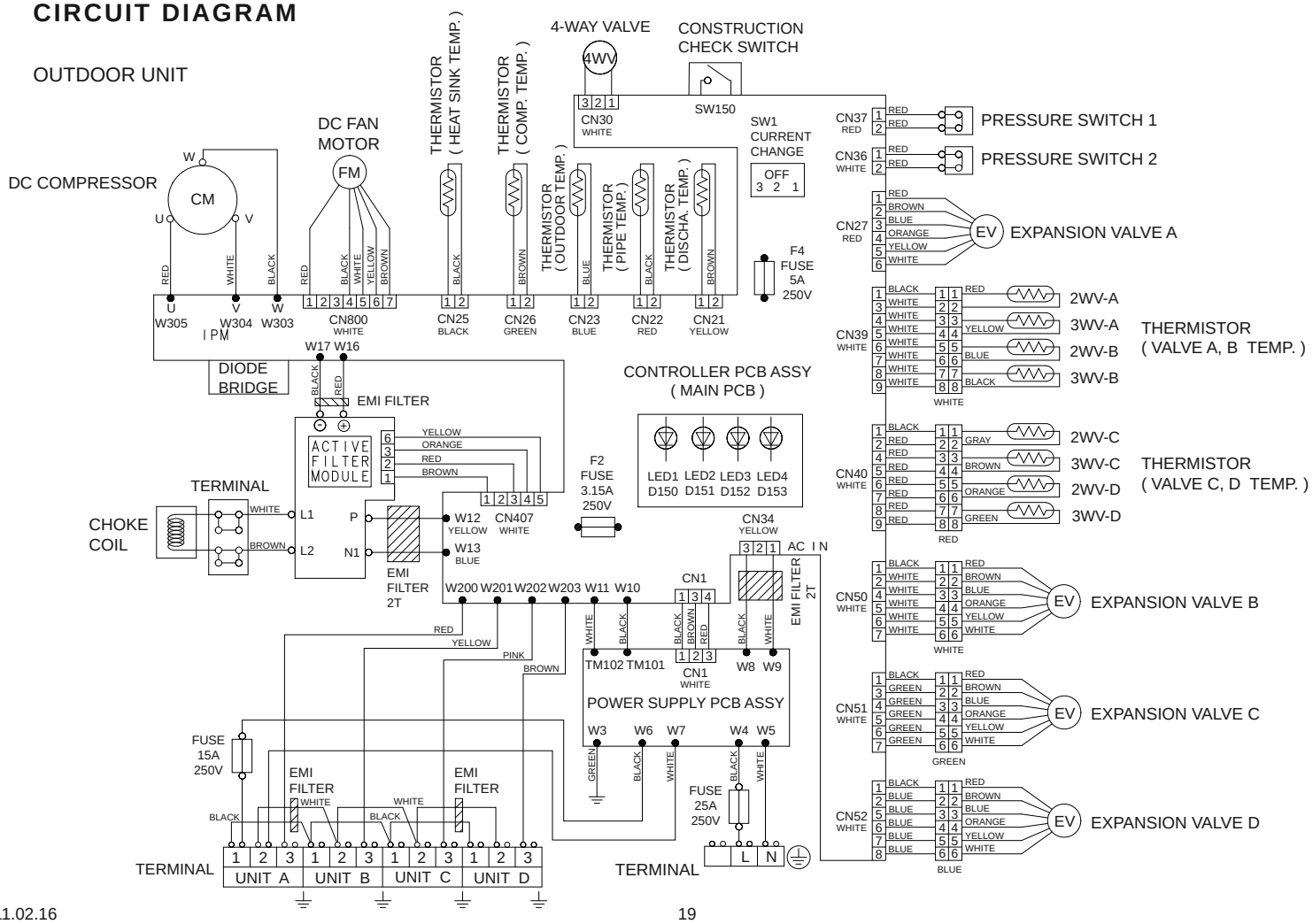

INDOOR UNIT
COMPACT WALL MOUNTED
ASYG07LJCA
ASYG09LJCA
ASYG12LJCA

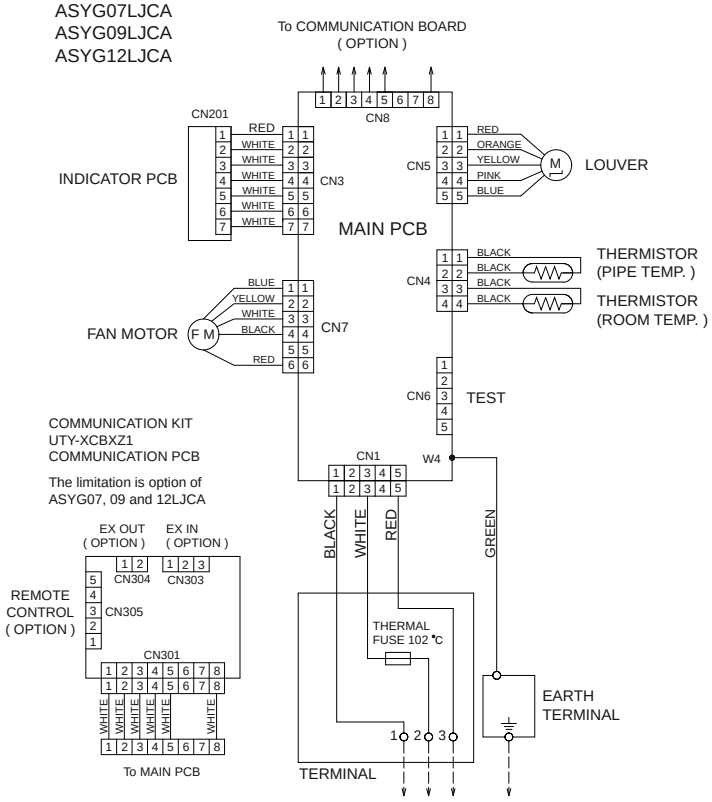

INDOOR UNIT
COMPACT WALL MOUNTED
ASYG07LUCA
ASYG09LUCA
ASYG12LUCA
ASYG14LUCA

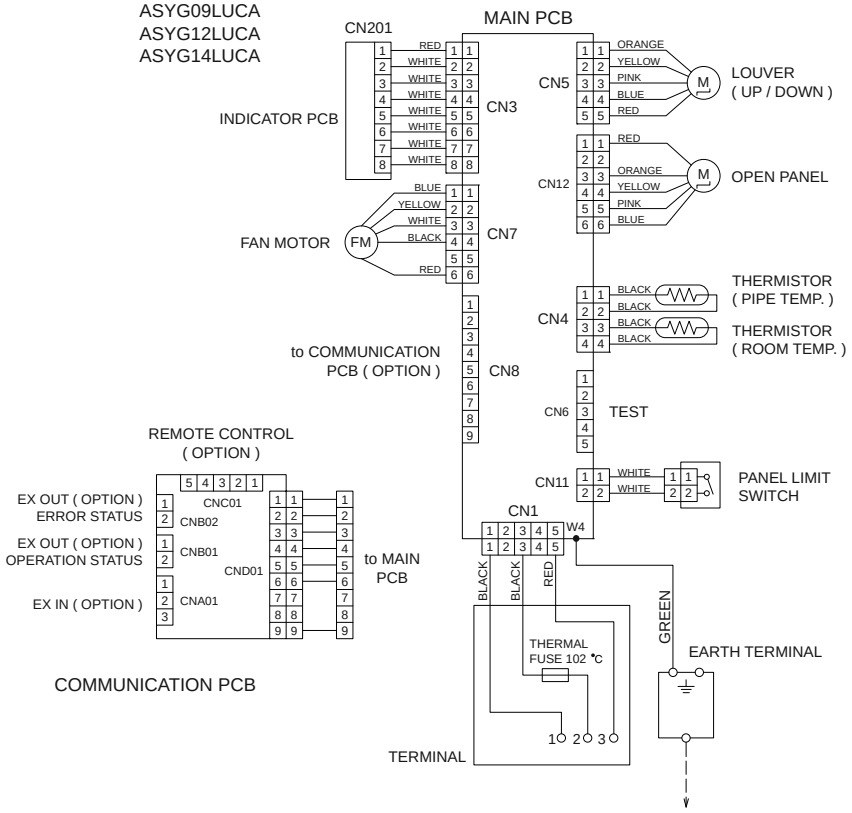

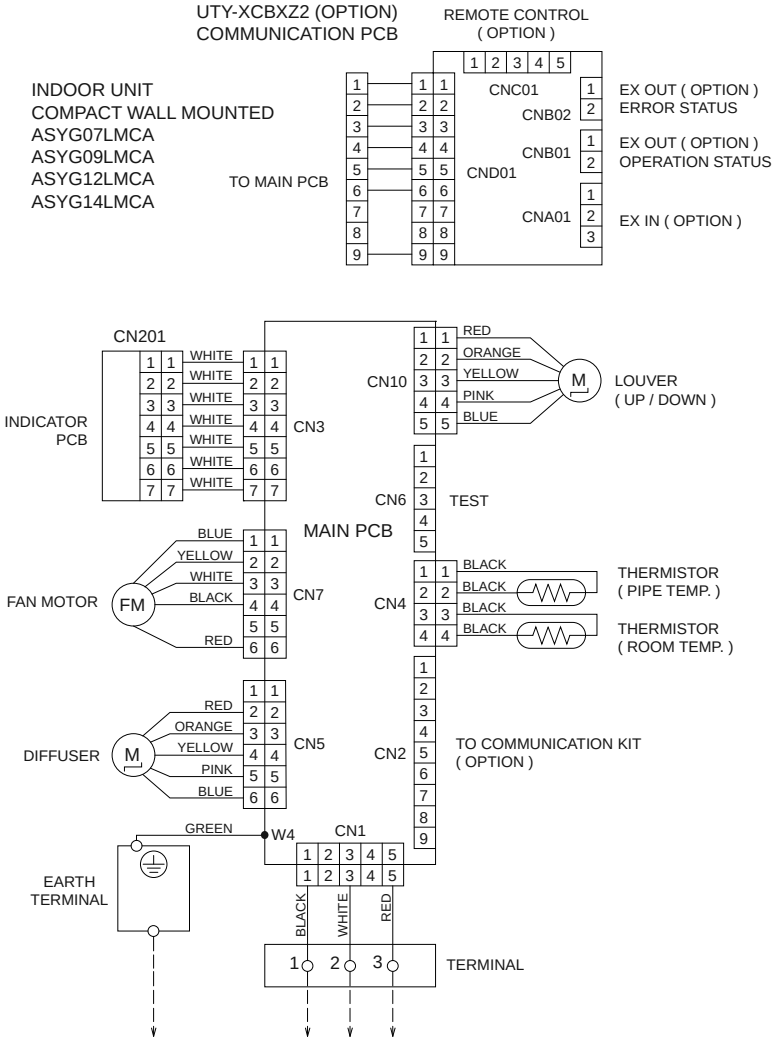
UTY-XCBXZ2 (OPTION)
COMMUNICATION PCB
REMOTE CONTROL
(OPTION)
INDOOR UNIT
COMPACT WALL MOUNTED
ASYG07LMCA
ASYG09LMCA
ASYG12LMCA
ASYG14LMCA
TO MAIN PCB
CNC01
CNB02
CNB01
CND01
CNA01
EX OUT (OPTION)
ERROR STATUS
EX OUT (OPTION)
OPERATION STATUS
EX IN (OPTION)
CN201
INDICATOR
PCB
CN3
CN10
LOUVER
(UP / DOWN)
MAIN PCB
CN6
TEST
FAN MOTOR
CN7
CN4
THERMISTOR
(PIPE TEMP.)
THERMISTOR
(ROOM TEMP.)
DIFFUSER
CN5
CN2
TO COMMUNICATION KIT
(OPTION)
GREEN
W4
CN1
EARTH
TERMINAL
BLACK
WHITE
RED
TERMINAL

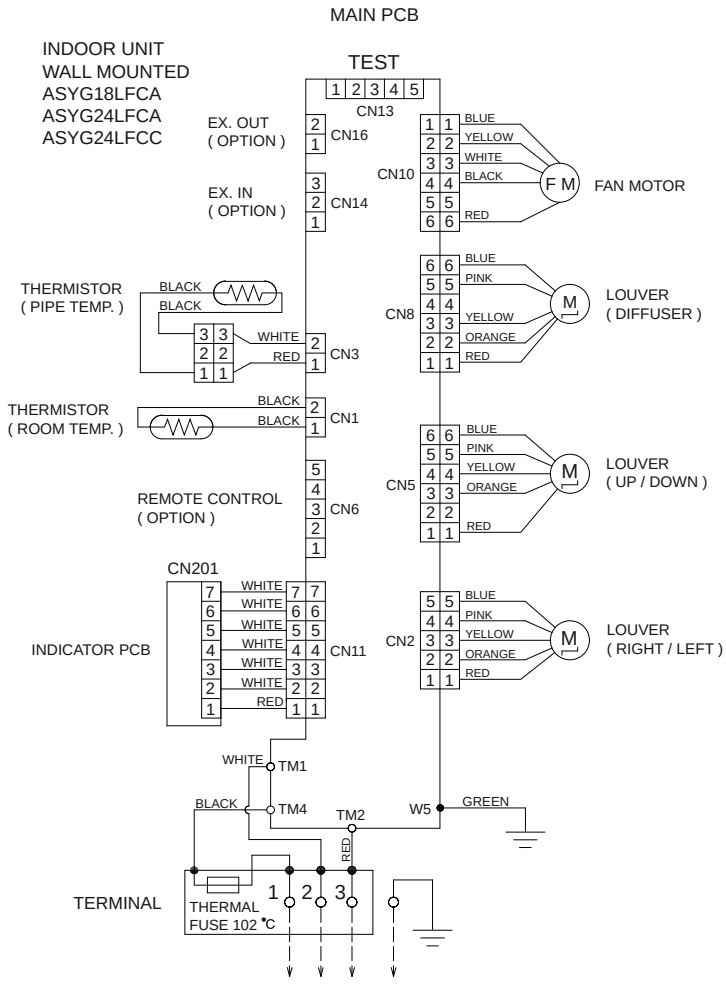
MAIN PCB
INDOOR UNIT
WALL MOUNTED
ASYG18LFCA
ASYG24LFCA
ASYG24LFCC
TEST
CN13
EX. OUT
(OPTION)
CN16
EX. IN
(OPTION)
CN14
CN10
FAN MOTOR
THERMISTOR
(PIPE TEMP.)
CN3
CN8
LOUVER
(DIFFUSER)
THERMISTOR
(ROOM TEMP.)
CN1
REMOTE CONTROL
(OPTION)
CN6
CN5
LOUVER
(UP / DOWN)
CN201
INDICATOR PCB
CN11
CN2
LOUVER
(RIGHT / LEFT)
TM1
TM4
TM2
W5
GREEN
TERMINAL
THERMAL
FUSE 102 ℃

INDOOR UNIT
COMPACT CASSETTE
AUYG07LVLA
AUYG09LVLA
AUYG12LVLA
AUYG14LVLA
AUYG18LVLA
AUYG12LVLB
AUYG14LVLB
AUYG18LVLB

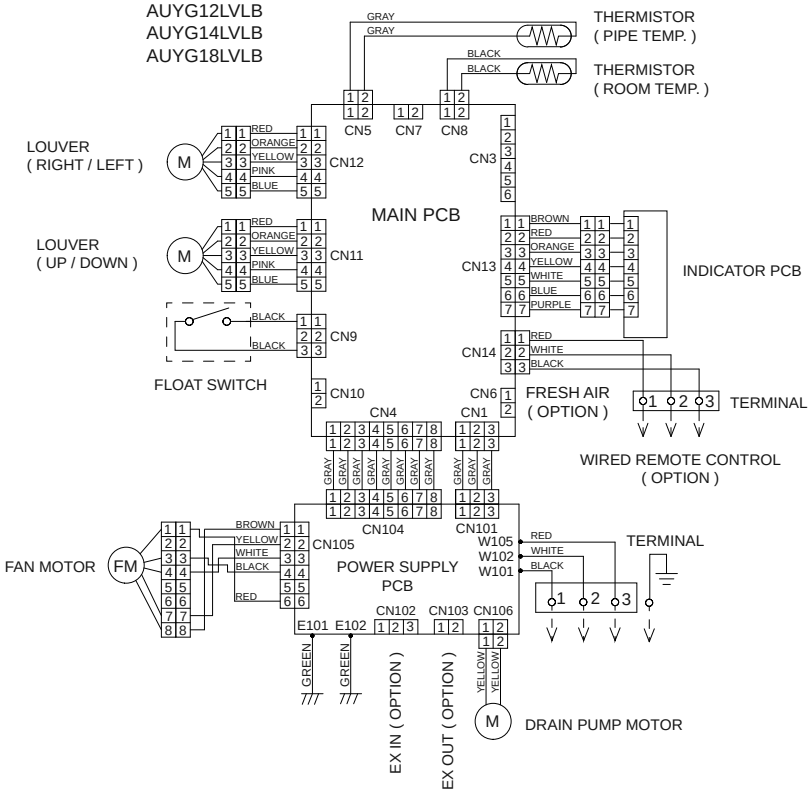

INDOOR UNIT
FLOOR
AGYG09LVCA
AGYG12LVCA
AGYG14LVCA

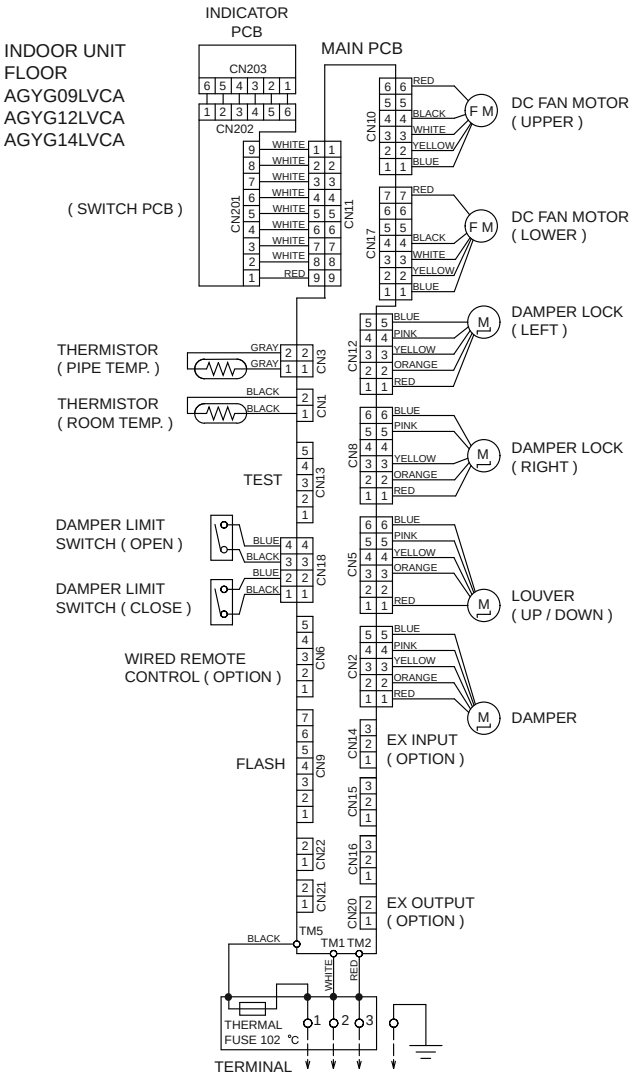

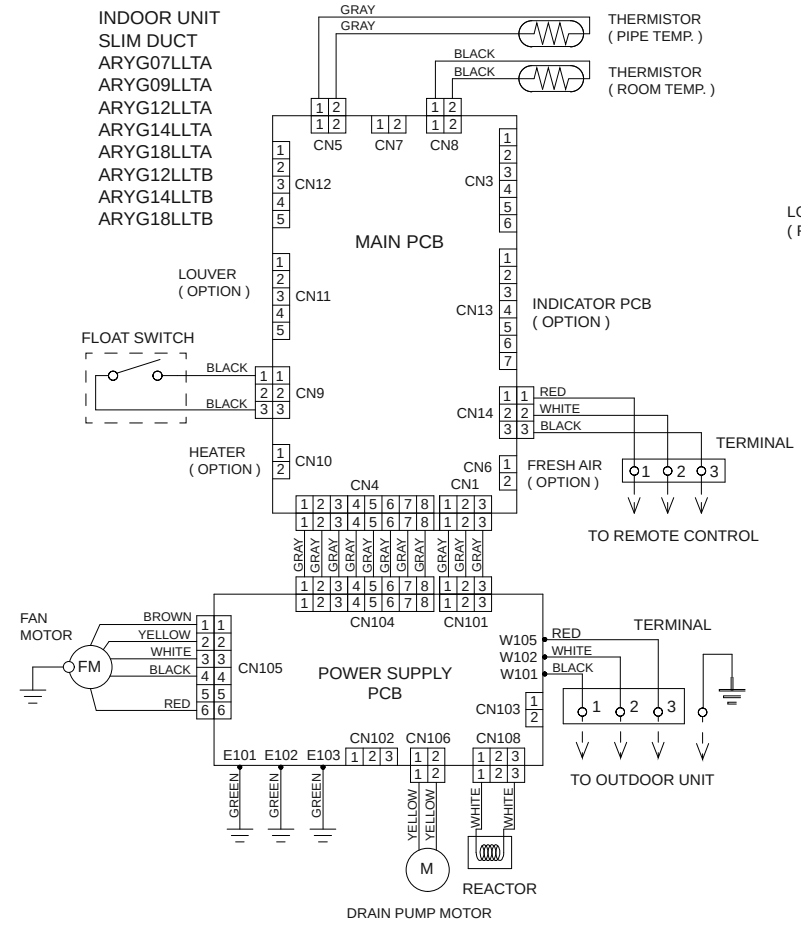
INDOOR UNIT
SLIM DUCT
ARYG07LLTA
ARYG09LLTA
ARYG12LLTA
ARYG14LLTA
ARYG18LLTA
ARYG12LLTB
ARYG14LLTB
ARYG18LLTB
GRAY
GRAY
THERMISTOR
(PIPE TEMP.)
BLACK
BLACK
THERMISTOR
(ROOM TEMP.)
CN5
CN7
CN8
CN12
CN3
MAIN PCB
LOUVER
(OPTION)
CN11
CN13
INDICATOR PCB
(OPTION)
FLOAT SWITCH
BLACK
BLACK
CN9
CN14
RED
WHITE
BLACK
HEATER
(OPTION)
CN10
CN6
FRESH AIR
(OPTION)
TERMINAL
CN4
CN1
TO REMOTE CONTROL
GRAY
CN104
CN101
FAN
MOTOR
BROWN
YELLOW
WHITE
BLACK
RED
FM
CN105
POWER SUPPLY
PCB
W105
W102
W101
RED
WHITE
BLACK
TERMINAL
CN103
CN102
CN106
CN108
E101
E102
E103
GREEN
YELLOW
WHITE
M
DRAIN PUMP MOTOR
REACTOR
TO OUTDOOR UNIT

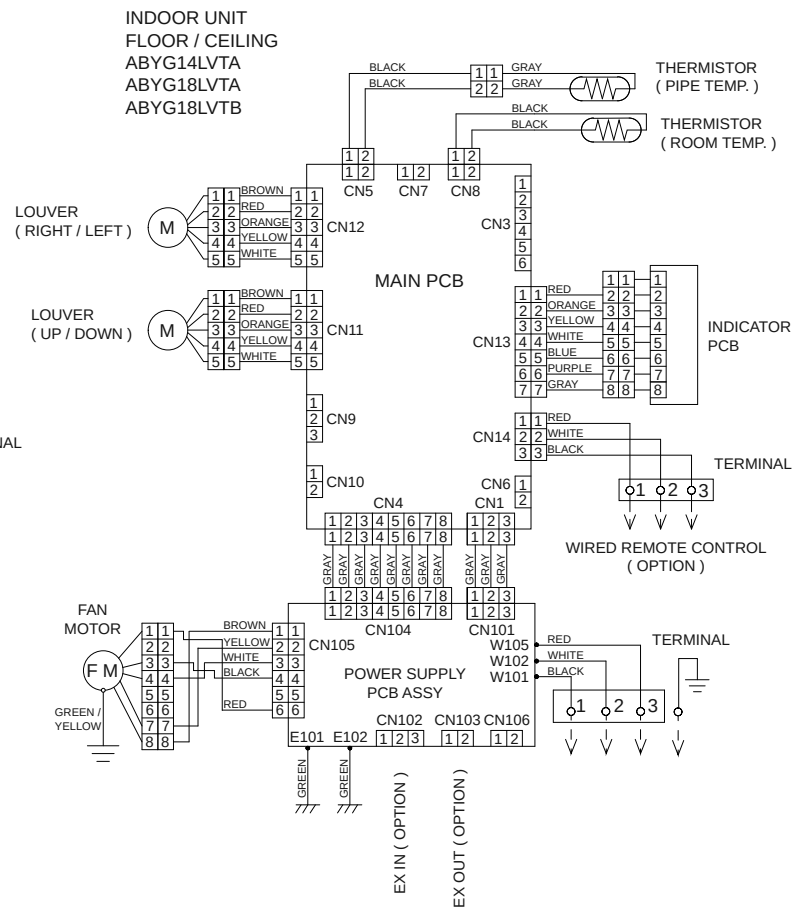
INDOOR UNIT
FLOOR / CEILING
ABYG14LVTA
ABYG18LVTA
ABYG18LVTB
BLACK
BLACK
GRAY
GRAY
THERMISTOR
(PIPE TEMP.)
BLACK
BLACK
THERMISTOR
(ROOM TEMP.)
CN5
CN7
CN8
LOUVER
(RIGHT / LEFT)
M
BROWN
RED
ORANGE
YELLOW
WHITE
CN12
CN3
MAIN PCB
LOUVER
(UP / DOWN)
CN11
CN13
INDICATOR
PCB
RED
ORANGE
YELLOW
WHITE
BLUE
PURPLE
GRAY
CN9
CN14
RED
WHITE
BLACK
TERMINAL
CN10
CN6
CN4
CN1
WIRED REMOTE CONTROL
(OPTION)
GRAY
CN104
CN101
FAN
MOTOR
F M
GREEN /
YELLOW
BROWN
YELLOW
WHITE
BLACK
RED
CN105
POWER SUPPLY
PCB ASSY
W105
W102
W101
RED
WHITE
BLACK
TERMINAL
E101
E102
CN102
CN103
CN106
GREEN
EX IN (OPTION)
EX OUT (OPTION)

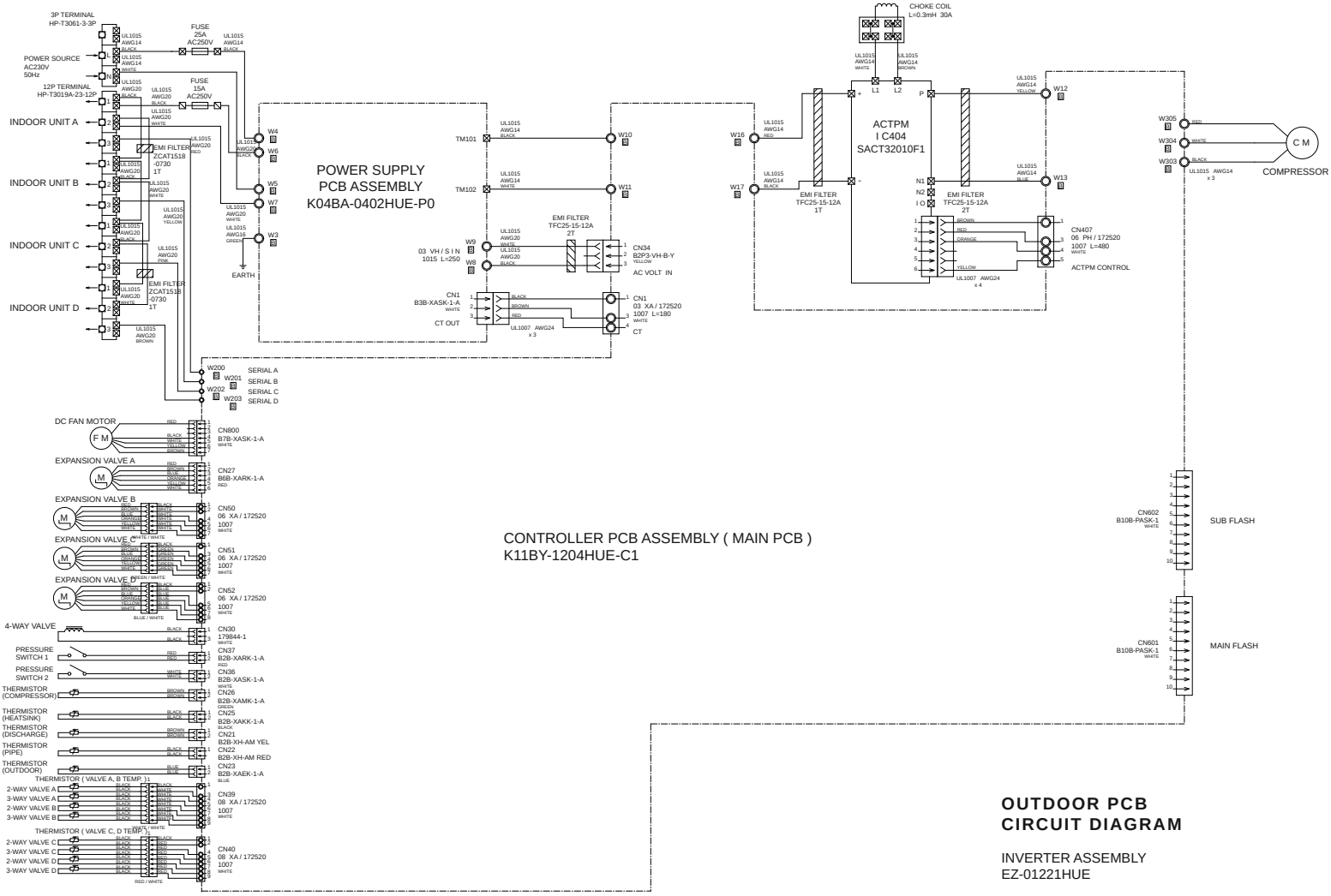

CONTROLLER PCB ASSEMBLY (MAIN PCB)
K11BY-1204HUE-C1

OUTDOOR PCB CIRCUIT DIAGRAM

INVERTER ASSEMBLY
EZ-01221HUE

OUTDOOR UNIT
CONTROLLER PCB ASSEMBLY (MAIN PCB)
K11BY-1204HUE-C1

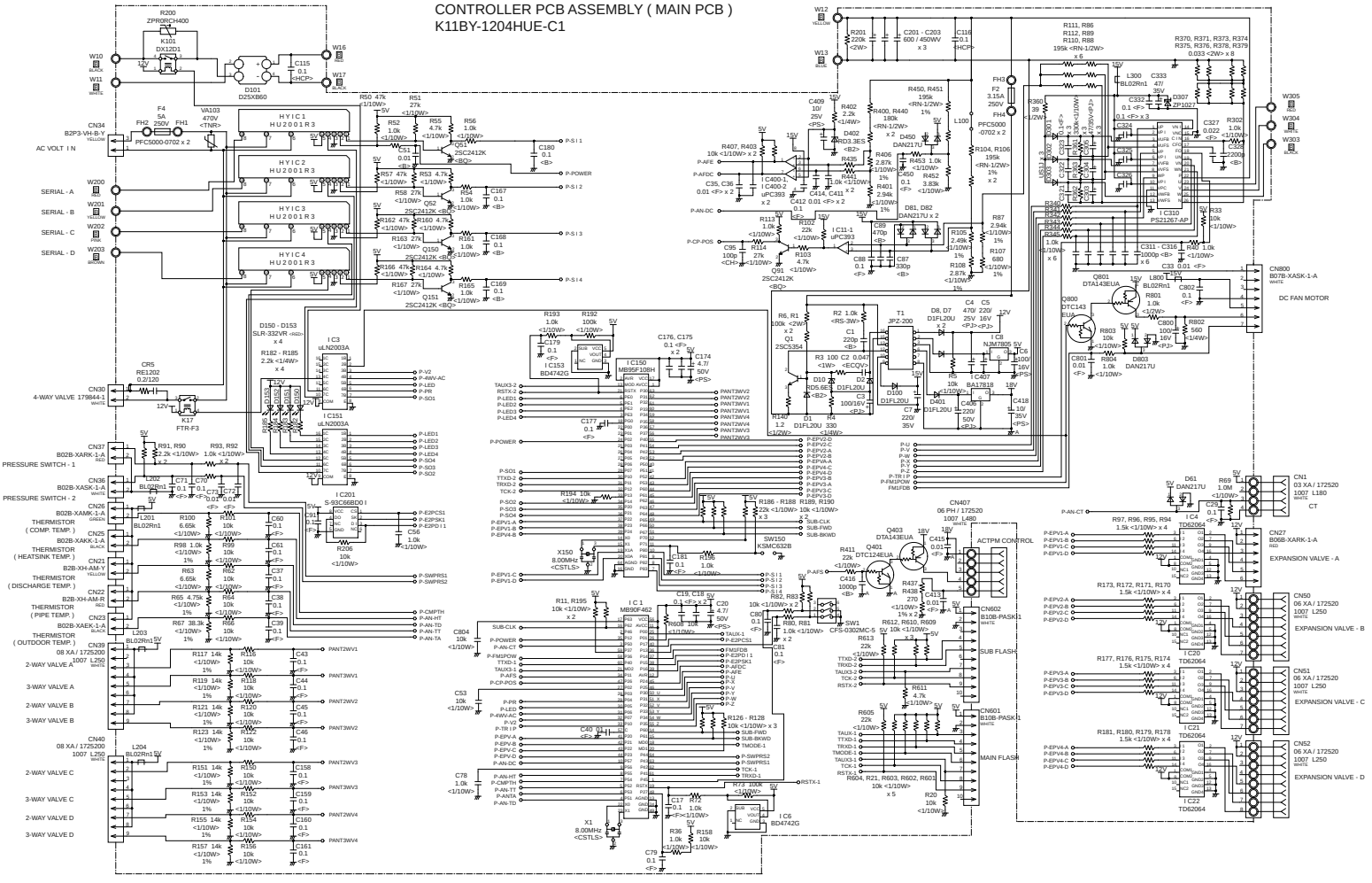

OUTDOOR UNIT
POWER SUPPLY PCB ASSEMBLY
K04BA-0402HUE-P0

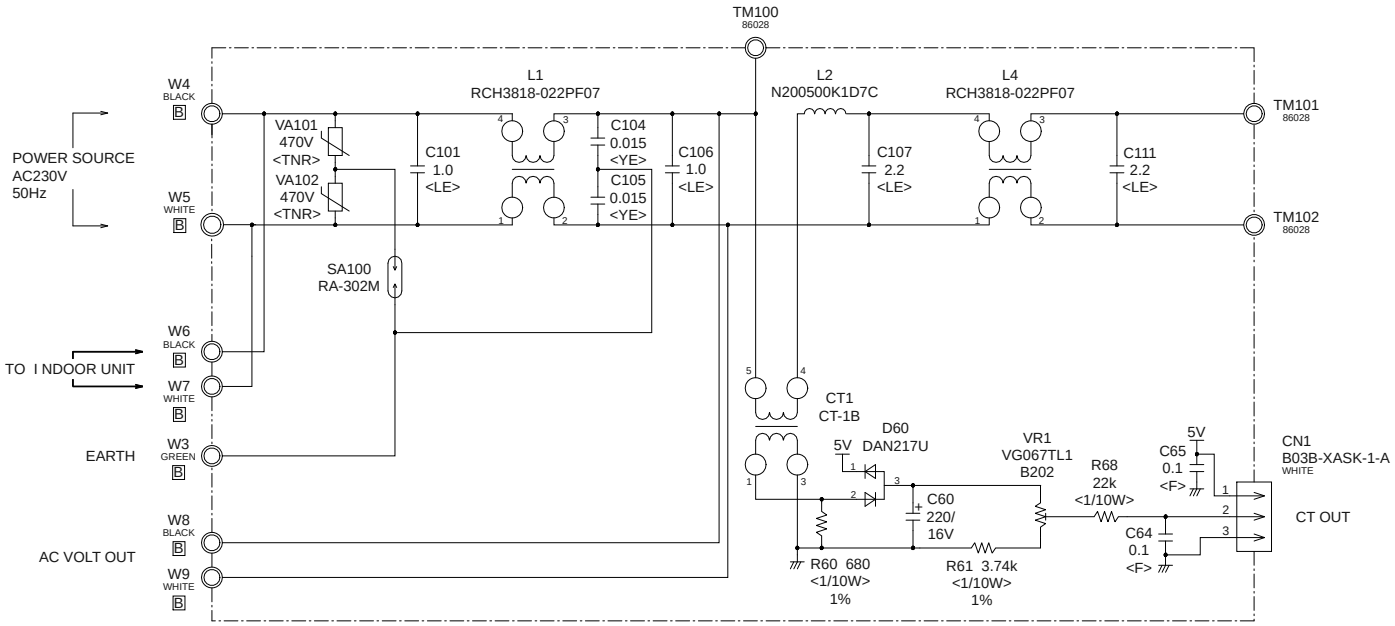

INDOOR PCB CIRCUIT DIAGRAM

COMPACT WALL MOUNTED
CONTROL UNIT
ASYG07LJCA : EZ-01235HSE
ASYG09LJCA : EZ-01236HSE
ASYG12LJCA : EZ-01237HSE

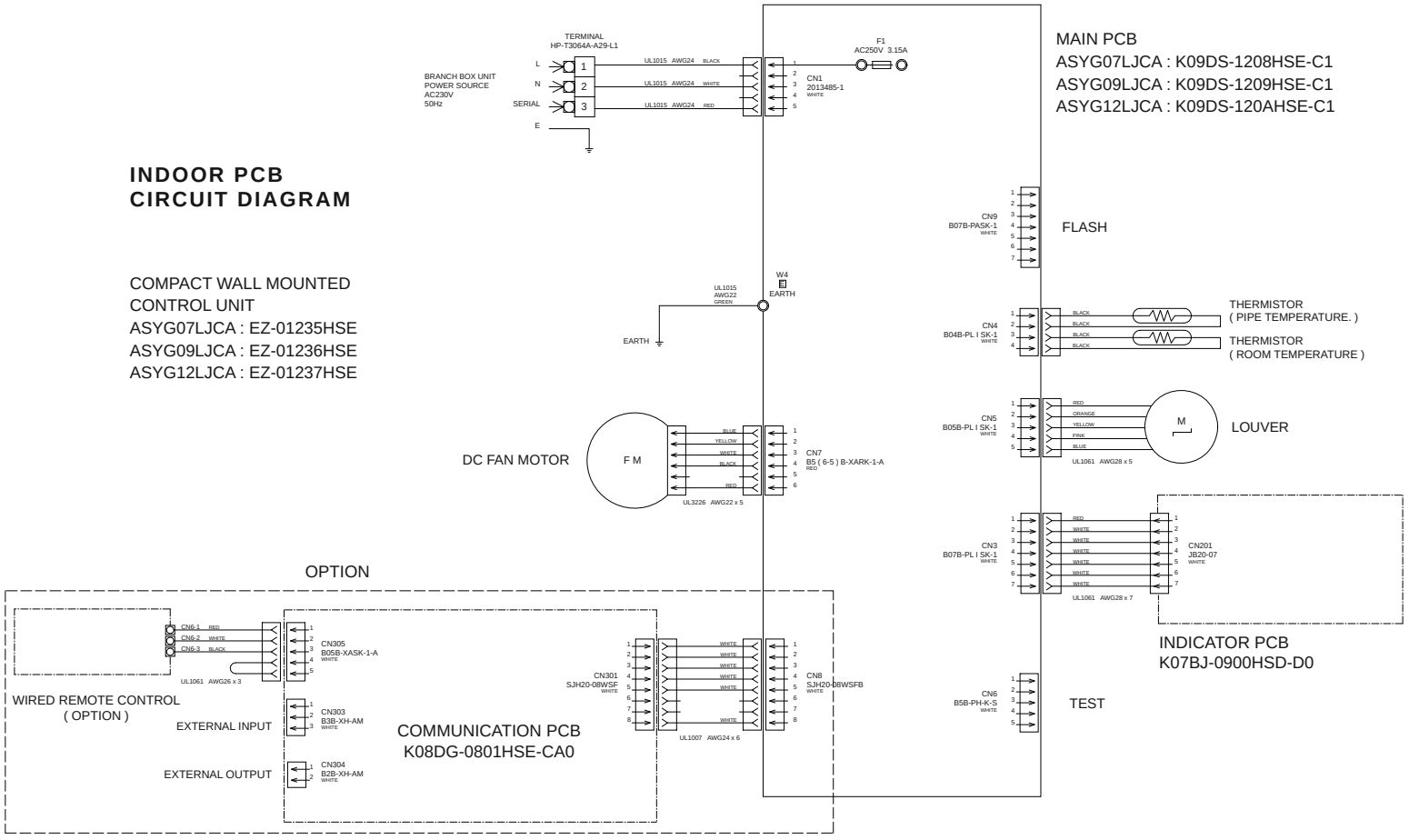

INDOOR UNIT
COMPACT WALL MOUNTED
MAIN PCB
ASYG07LJCA : K09DS-1208HSE-C1
ASYG09LJCA : K09DS-1209HSE-C1
ASYG12LJCA : K09DS-120AHSE-C1

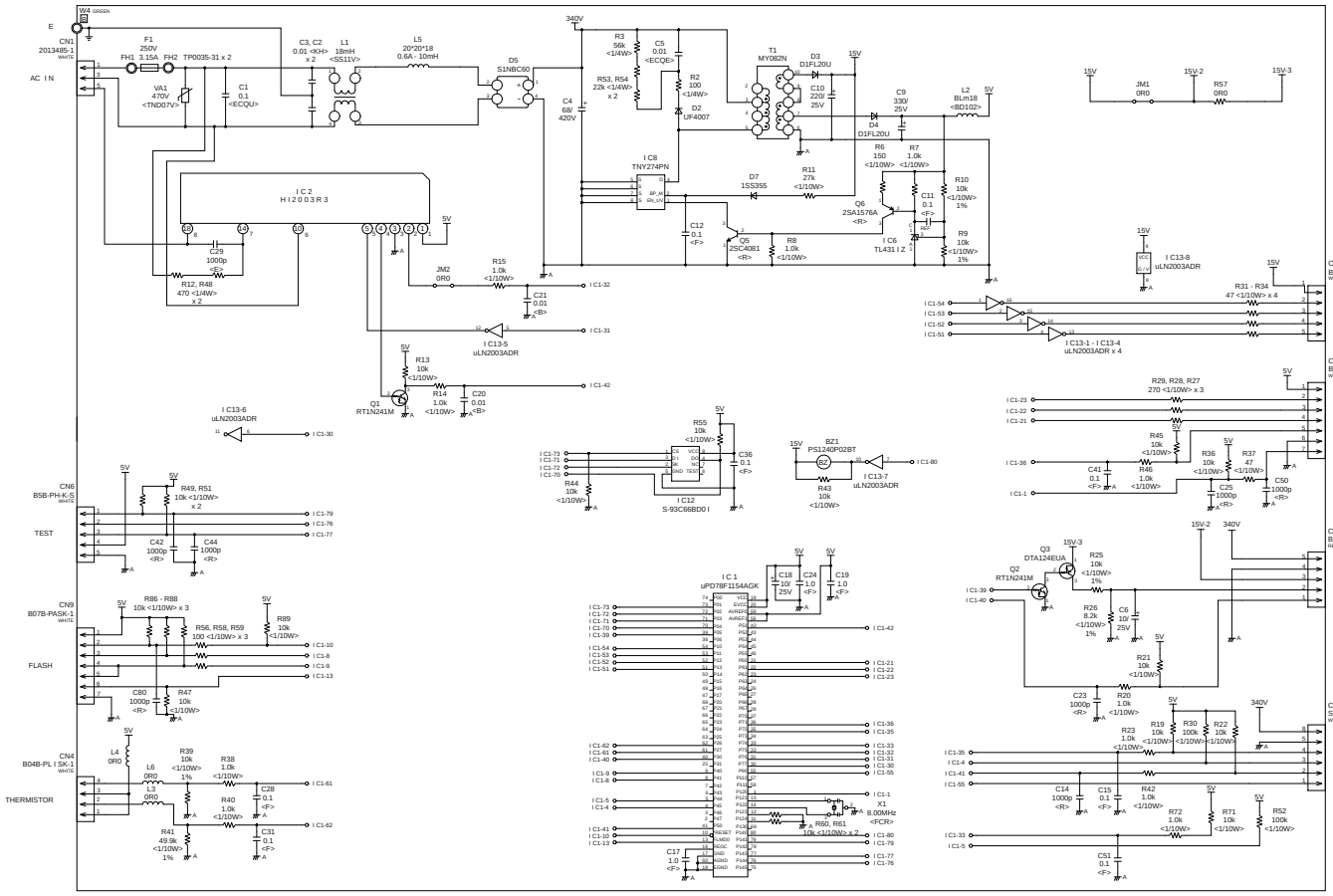

INDOOR UNIT
COMPACT WALL MOUNTED
ASYG07LJCA
ASYG09LJCA
ASYG12LJCA

INDICATOR PCB
K07BJ-0900HSD-D0

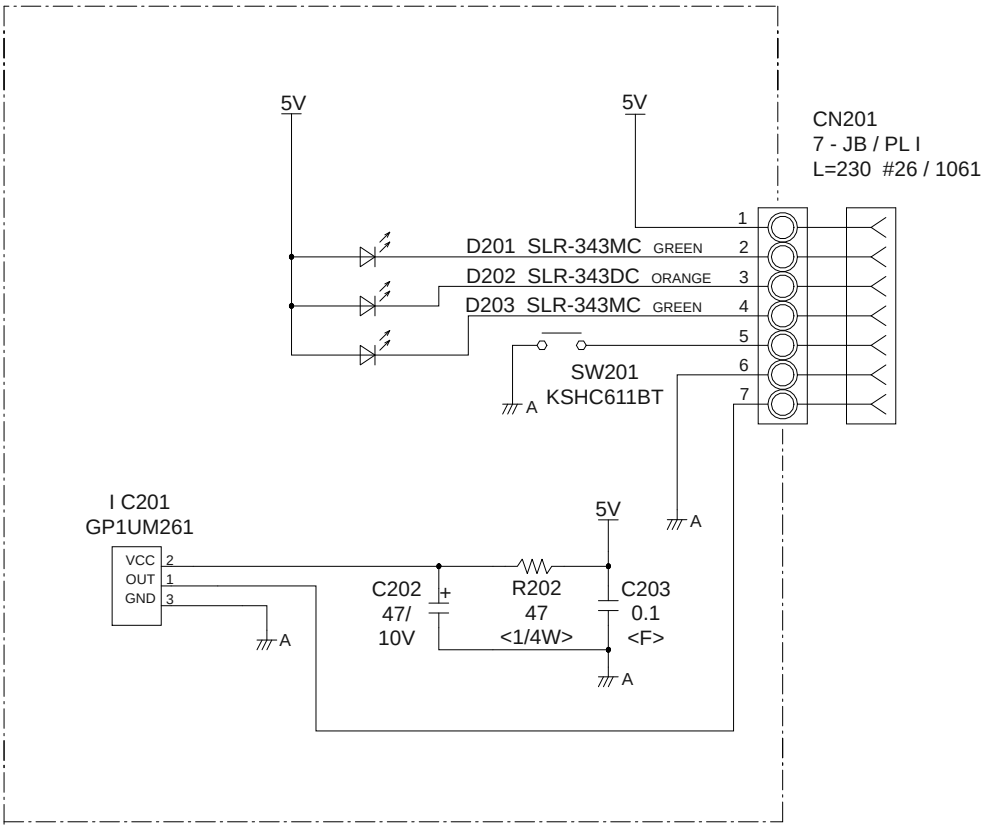

TO MAIN PCB

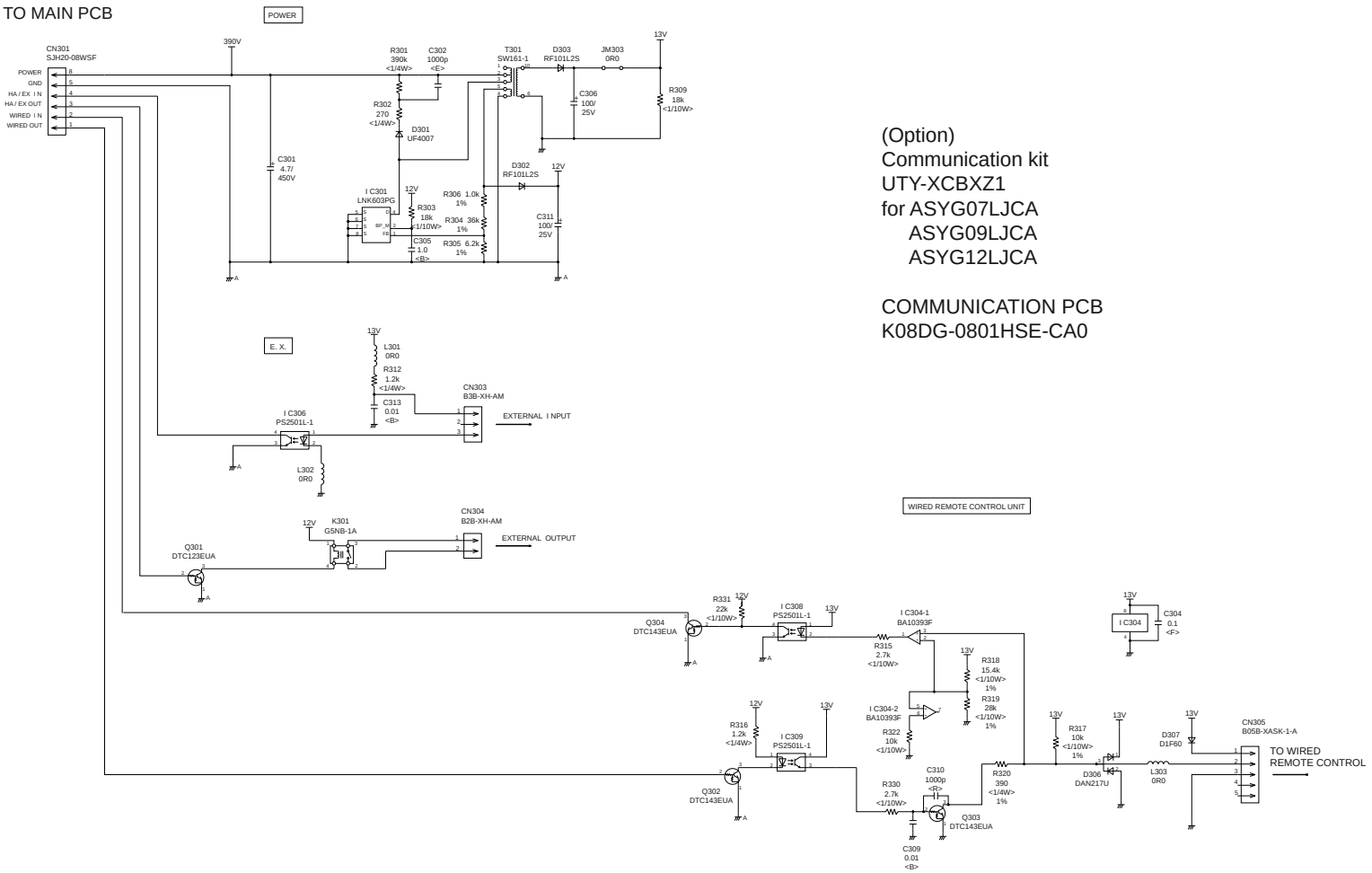

(Option)
Communication kit
UTY-XCBXZ1
for ASYG07LJCA
ASYG09LJCA
ASYG12LJCA

COMMUNICATION PCB
K08DG-0801HSE-CA0

INDOOR UNIT
COMPACT WALL MOUNTED
CONTROL UNIT
ASYG07LUCA : EZ-0121CHSE
ASYG09LUCA : EZ-0121DHSE
ASYG12LUCA : EZ-0121EHSE
ASYG14LUCA : EZ-0121FHSE

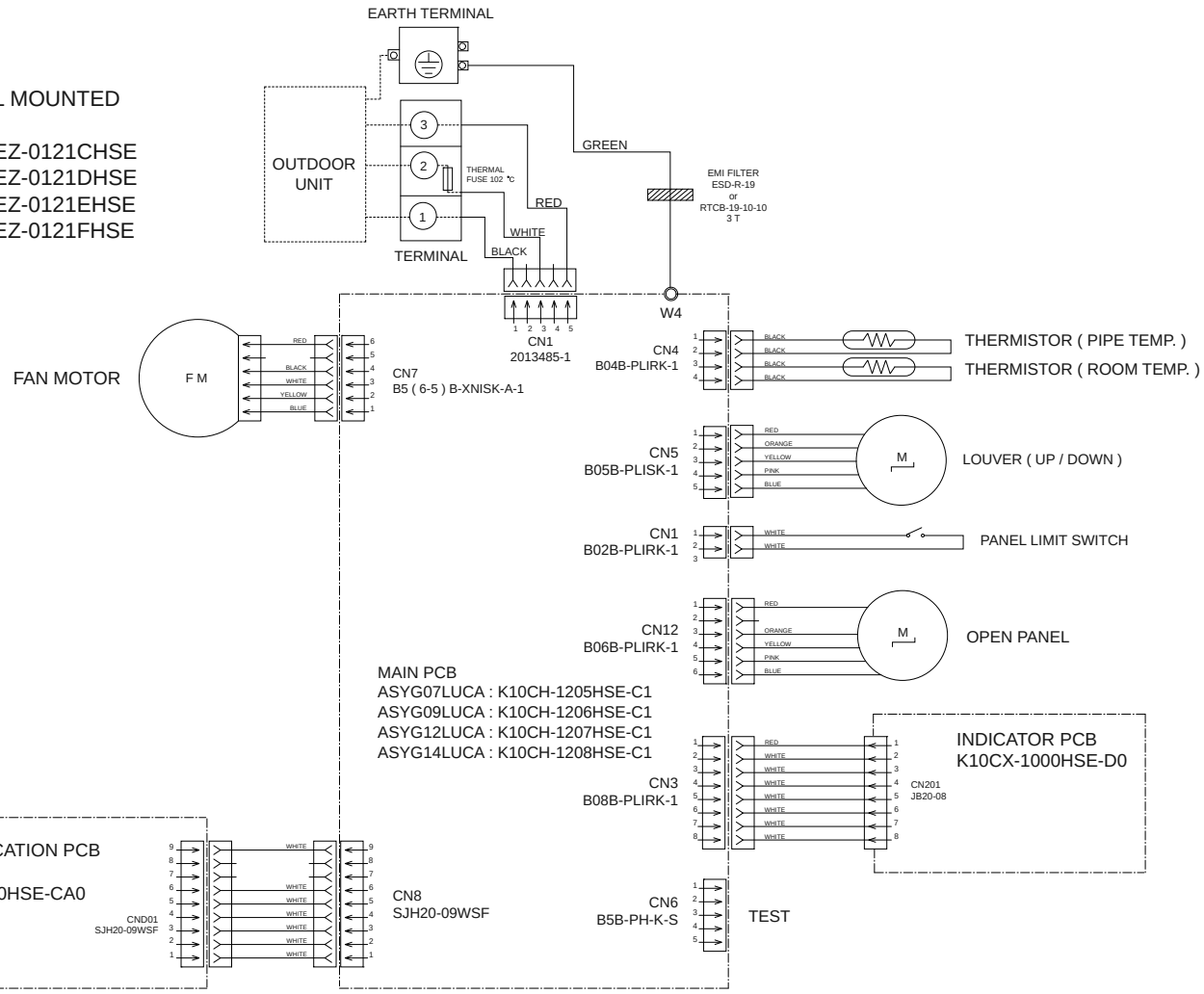

INDOOR UNIT
COMPACT WALL MOUNTED
MAIN PCB
ASYG07LUCA : K10CH-1205HSE-C1
ASYG09LUCA : K10CH-1206HSE-C1
ASYG12LUCA : K10CH-1207HSE-C1
ASYG14LUCA : K10CH-1208HSE-C1

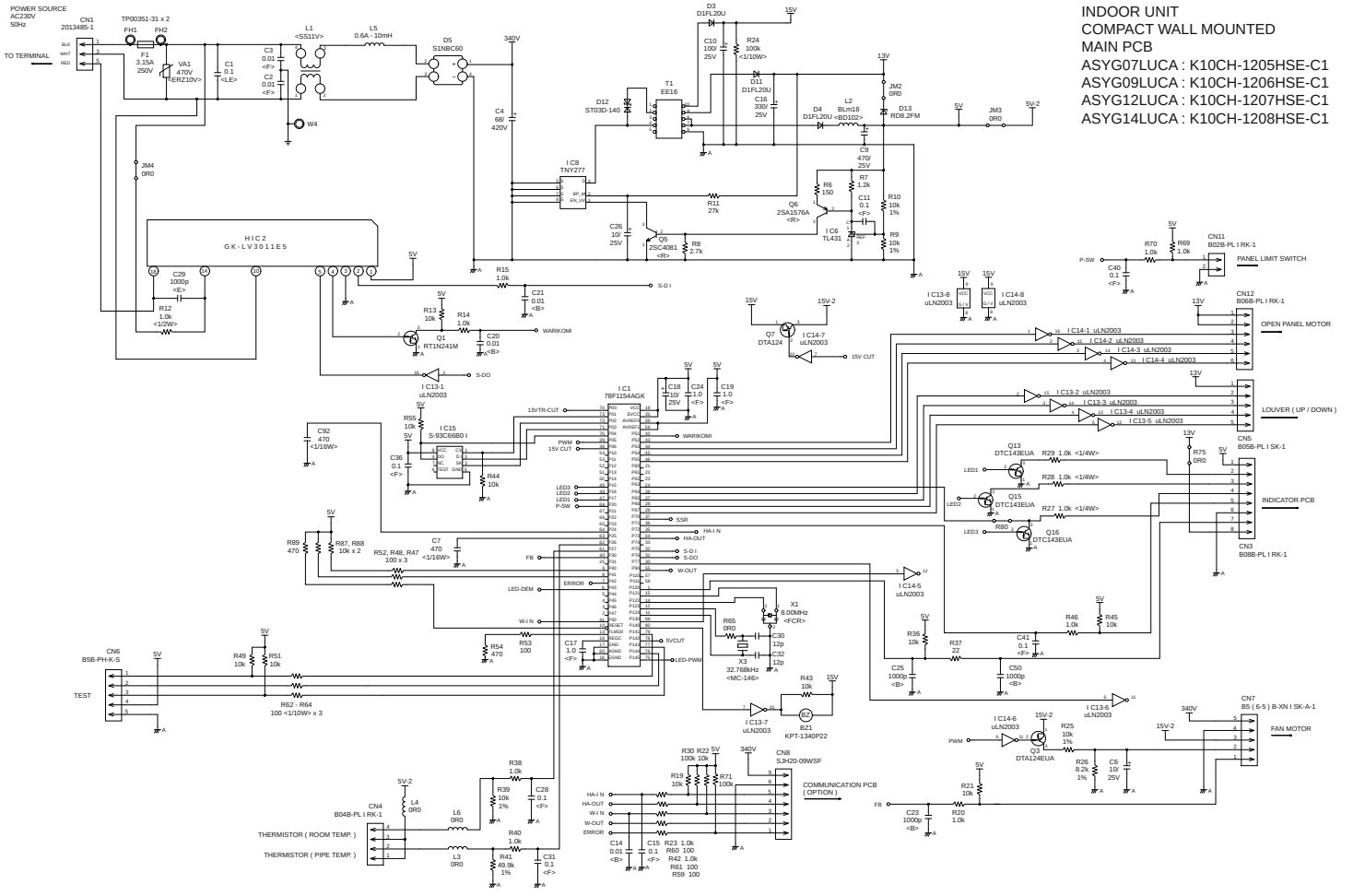

INDOOR UNIT
COMPACT WALL MOUNTED
ASYG07LUCA
ASYG09LUCA
ASYG12LUCA
ASYG14LUCA
INDICATOR PCB
K10CX-1000HSE-D0

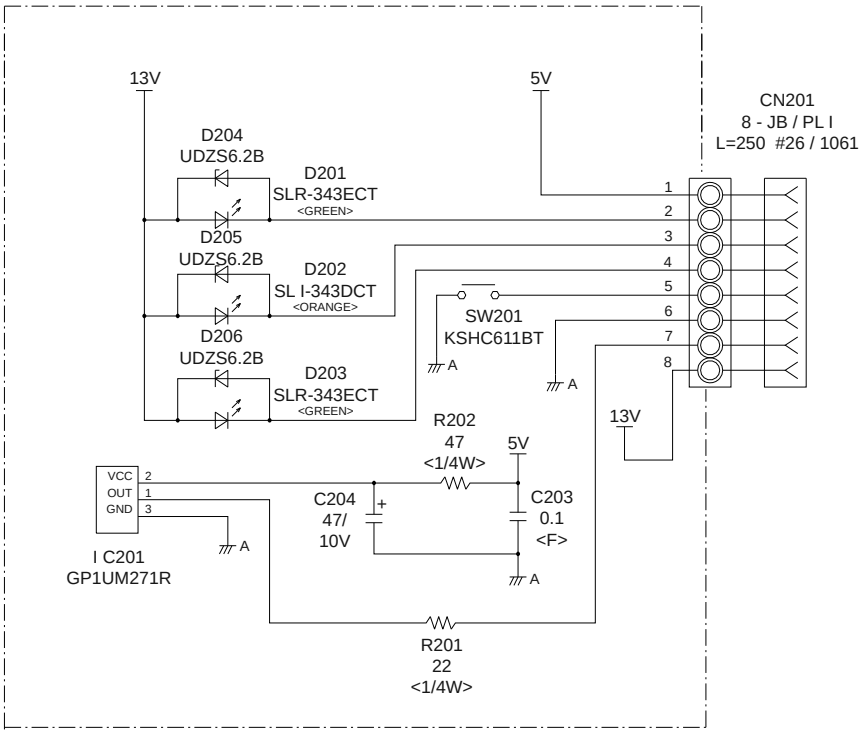

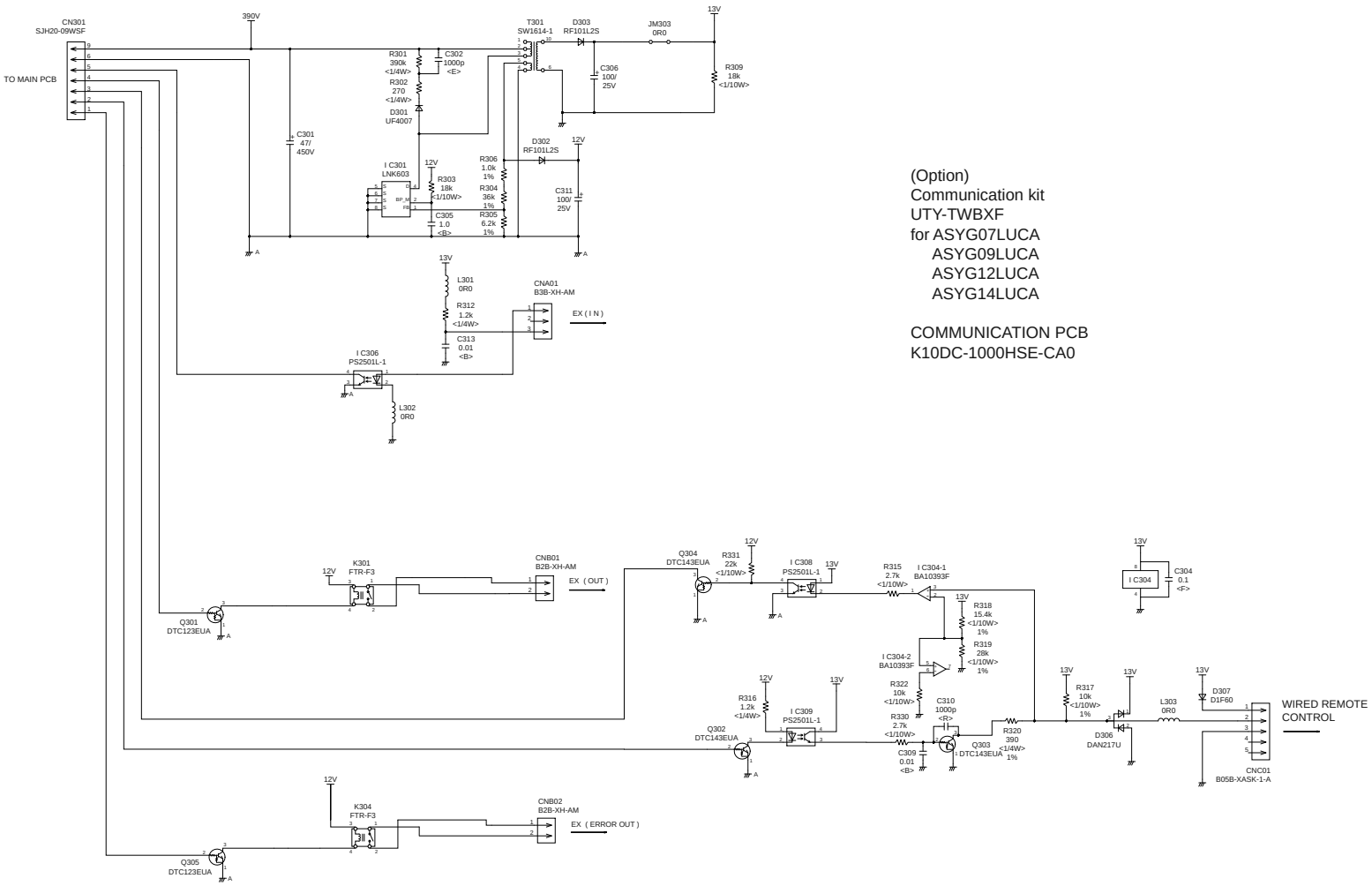
CN301
SJH20-09WSF
TO MAIN PCB
390V
T301
SW1614-1
D303
RF101L2S
JM303
0R0
13V
R309
18k
<1/10W>
C306
100/
25V
R301
390k
<1/4W>
C302
1000p
<E>
R302
270
<1/4W>
D301
UF4007
C301
47/
450V
D302
RF101L2S
12V
I C301
LNK603
R303
18k
<1/10W>
C305
1.0
<B>
R306
1.0k
1%
R304
36k
1%
R305
6.2k
1%
C311
100/
25V
L301
0R0
R312
1.2k
<1/4W>
C313
0.01
<B>
CNA01
B3B-XH-AM
EX (I N)
I C306
PS2501L-1
L302
0R0
(Option)
Communication kit
UTY-TWBXF
for ASYG07LUCA
ASYG09LUCA
ASYG12LUCA
ASYG14LUCA
COMMUNICATION PCB
K10DC-1000HSE-CA0
K301
FTR-F3
CNB01
B2B-XH-AM
EX (OUT)
Q301
DTC123EUA
Q304
DTC143EUA
R331
22k
<1/10W>
I C308
PS2501L-1
R315
2.7k
<1/10W>
I C304-1
BA10393F
R318
15.4k
<1/10W>
1%
R319
28k
<1/10W>
1%
I C304-2
BA10393F
R322
10k
<1/10W>
C310
1000p
<B>
R330
2.7k
<1/10W>
C309
0.01
<B>
R316
1.2k
<1/4W>
I C309
PS2501L-1
Q302
DTC143EUA
Q303
DTC143EUA
R320
390
<1/4W>
1%
I C304
C304
0.1
<F>
R317
10k
<1/10W>
1%
D306
DAN217U
L303
0R0
D307
D1F60
CNC01
B05B-XASK-1-A
WIRED REMOTE
CONTROL
K304
FTR-F3
CNB02
B2B-XH-AM
EX (ERROR OUT)
Q305
DTC123EUA

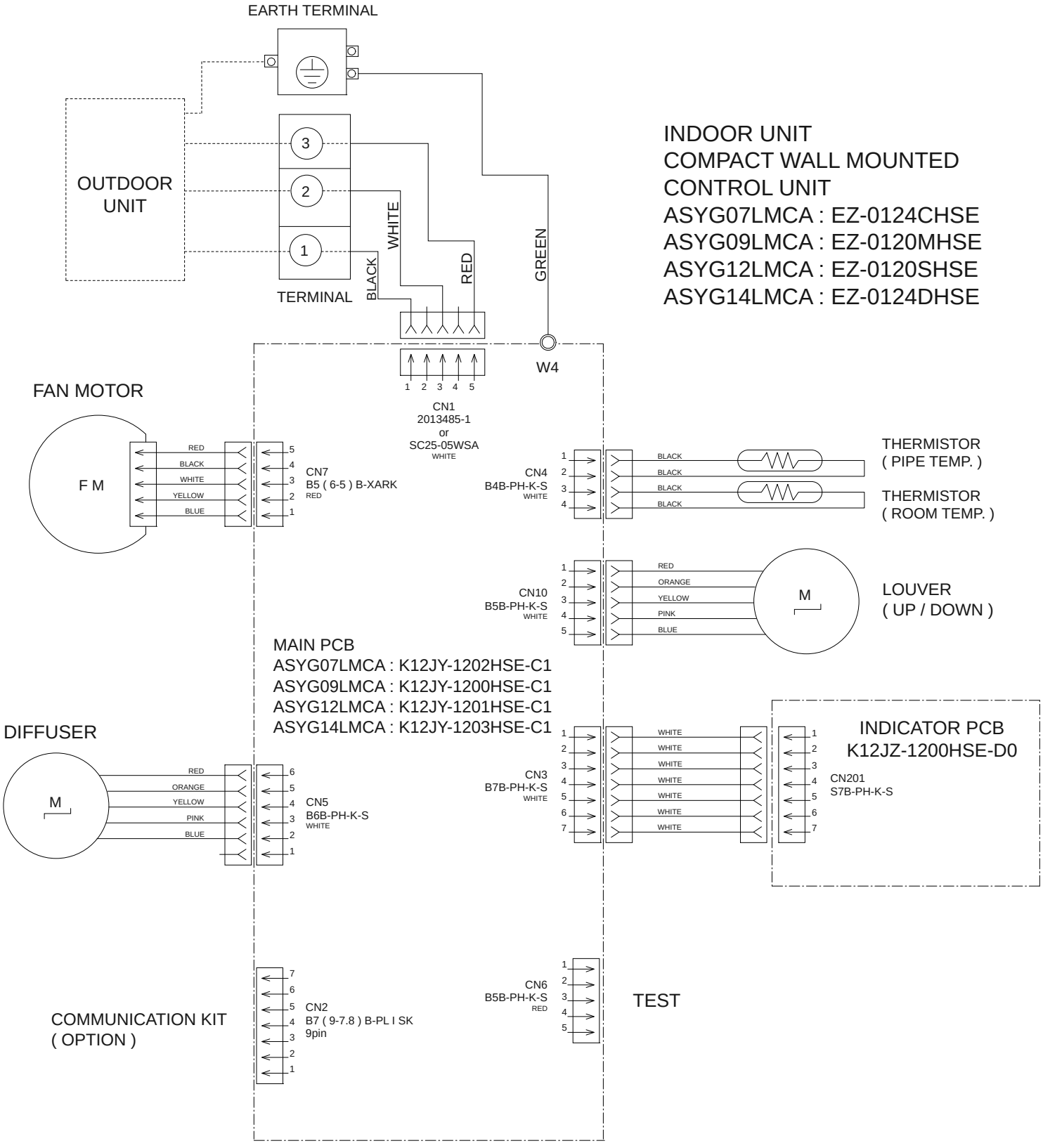
EARTH TERMINAL
OUTDOOR UNIT
3
2
1
TERMINAL
BLACK
WHITE
RED
GREEN
W4
1 2 3 4 5
CN1
2013485-1
or
SC25-05WSA
WHITE
INDOOR UNIT
COMPACT WALL MOUNTED
CONTROL UNIT
ASYG07LMCA : EZ-0124CHSE
ASYG09LMCA : EZ-0120MHSE
ASYG12LMCA : EZ-0120SHSE
ASYG14LMCA : EZ-0124DHSE
FAN MOTOR
F M
RED
BLACK
WHITE
YELLOW
BLUE
CN7
B5 (6-5) B-XARK
RED
CN4
B4B-PH-K-S
WHITE
BLACK
BLACK
BLACK
BLACK
THERMISTOR
(PIPE TEMP.)
THERMISTOR
(ROOM TEMP.)
CN10
B5B-PH-K-S
WHITE
RED
ORANGE
YELLOW
PINK
BLUE
M
LOUVER
(UP / DOWN)
MAIN PCB
ASYG07LMCA : K12JY-1202HSE-C1
ASYG09LMCA : K12JY-1200HSE-C1
ASYG12LMCA : K12JY-1201HSE-C1
ASYG14LMCA : K12JY-1203HSE-C1
DIFFUSER
M
RED
ORANGE
YELLOW
PINK
BLUE
CN5
B6B-PH-K-S
WHITE
CN3
B7B-PH-K-S
WHITE
WHITE
INDICATOR PCB
K12JZ-1200HSE-D0
CN201
S7B-PH-K-S
CN2
B7 (9-7.8) B-PL I SK
9pin
COMMUNICATION KIT
(OPTION)
CN6
B5B-PH-K-S
RED
TEST

INDOOR UNIT
COMPACT WALL MOUNTED
MAIN PCB
ASYG07LMCA : K12JY-1202HSE-C2
ASYG09LMCA : K12JY-1200HSE-C1
ASYG12LMCA : K12JY-1201HSE-C1
ASYG14LMCA : K12JY-1203HSE-C1

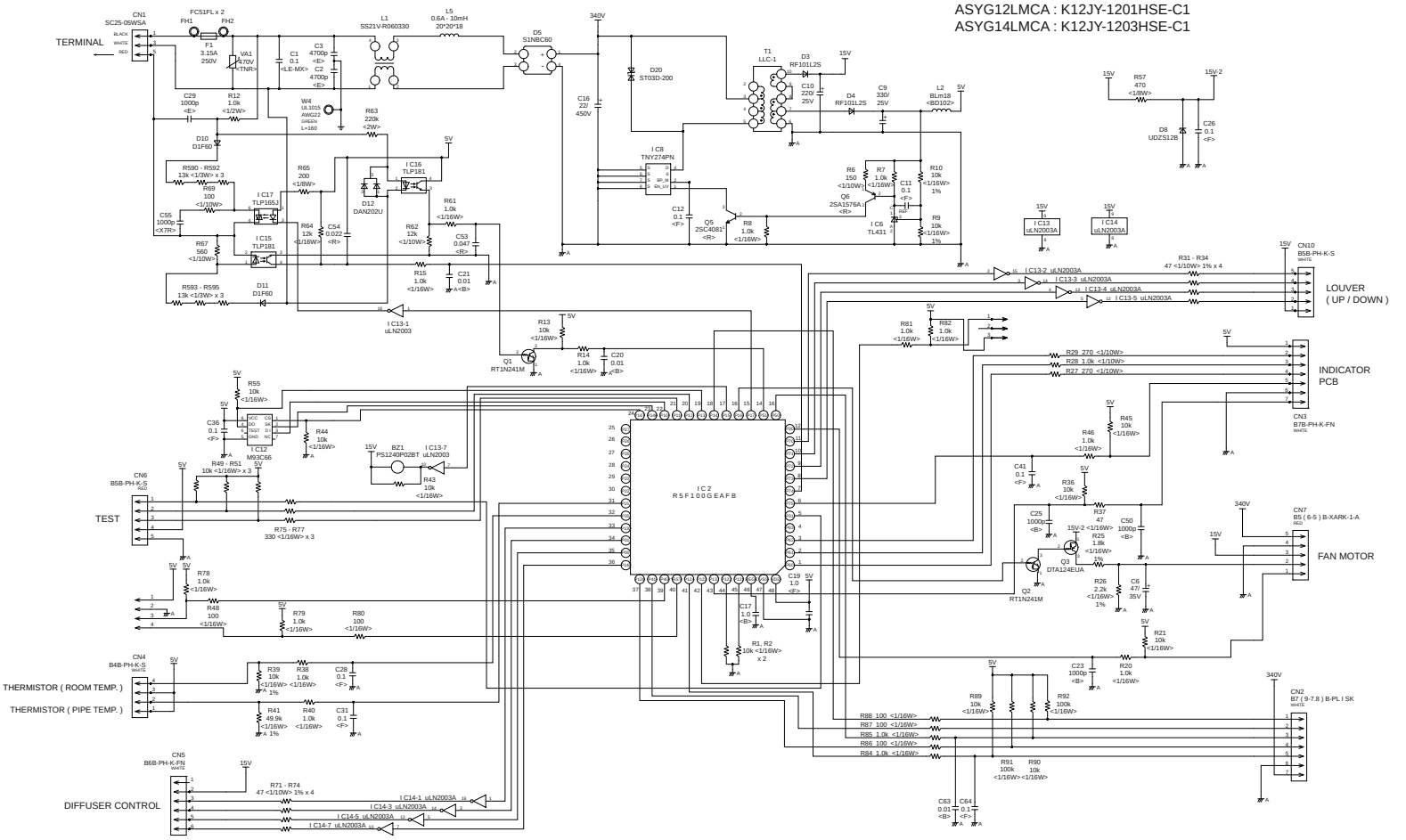

INDOOR UNIT
COMPACT WALL MOUNTED
ASYG07LMCA
ASYG09LMCA
ASYG12LMCA
ASYG14LMCA
INDICATOR PCB
K12JZ-1200HSE-D0

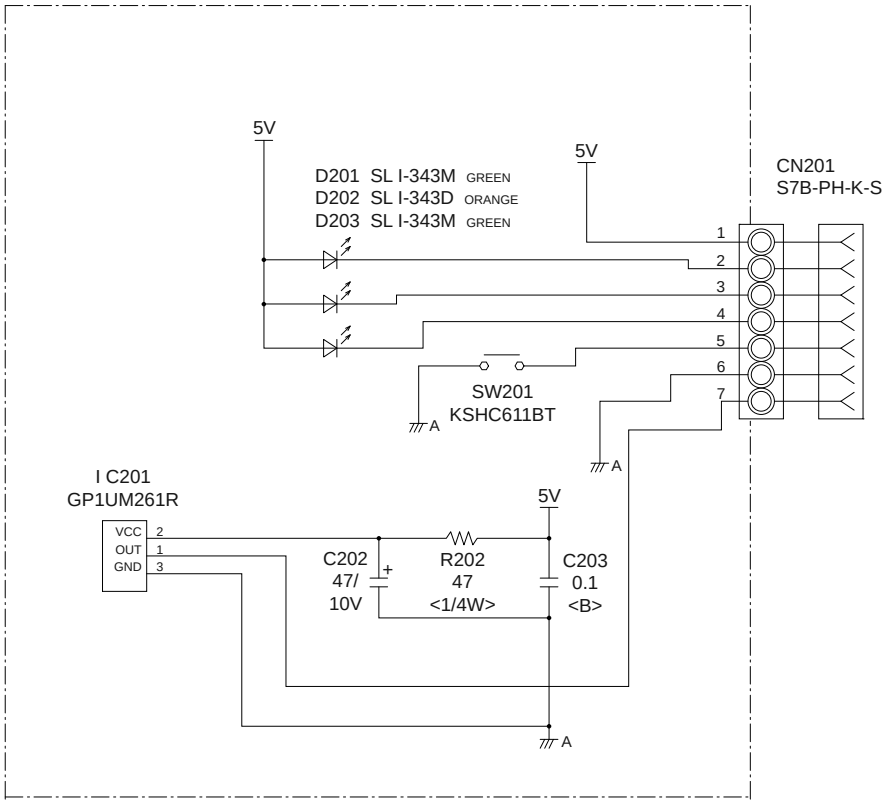

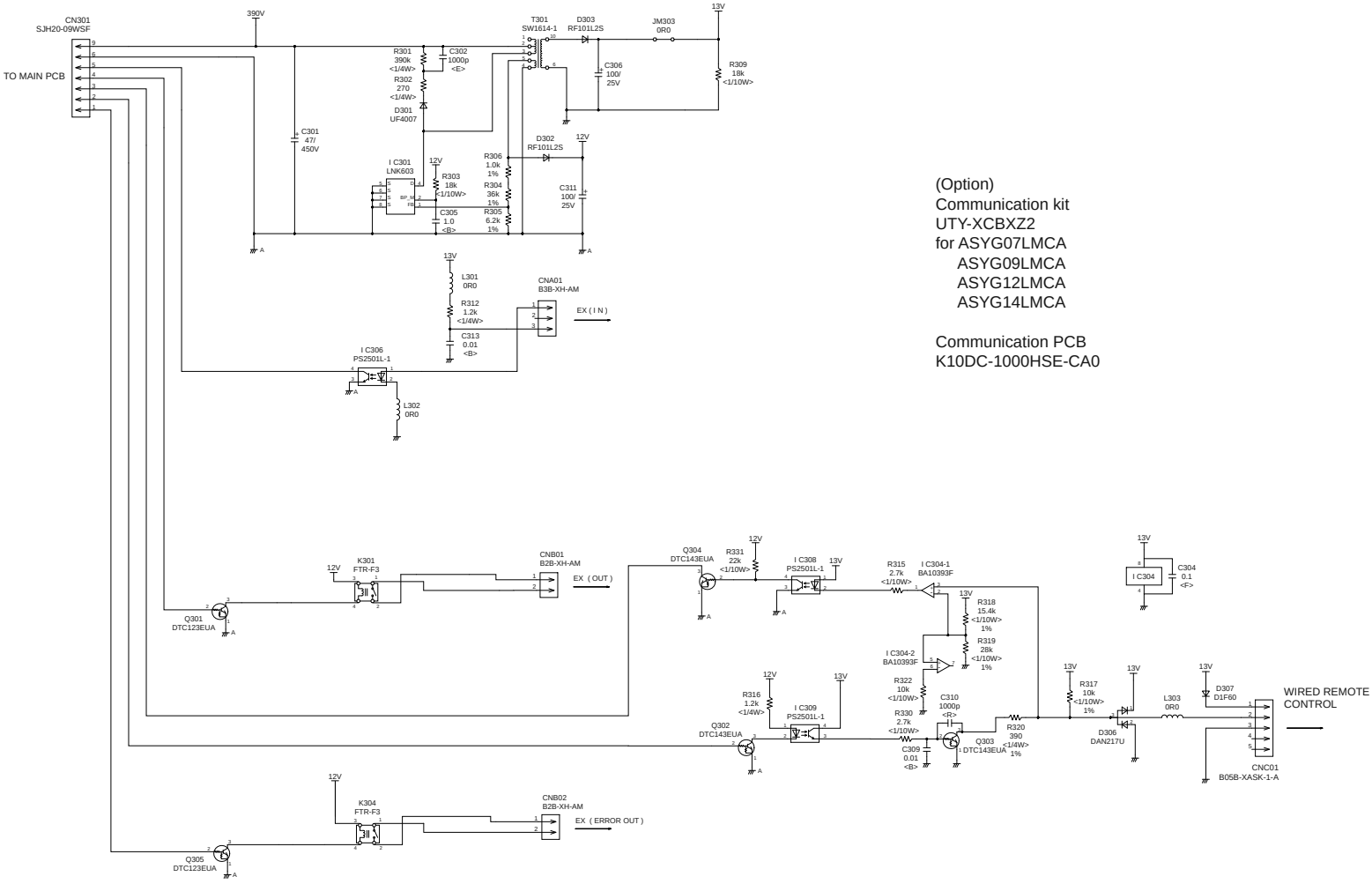

(Option)
Communication kit
UTY-XCBXZ2
for ASYG07LMCA
ASYG09LMCA
ASYG12LMCA
ASYG14LMCA

Communication PCB
K10DC-1000HSE-CA0

INDOOR UNIT
WALL MOUNTED
CONTROL UNIT
ASYG18LFCA : EZ-1212HSE
ASYG24LFCA : EZ-1238HSE
ASYG24LFCC : EZ-1211HSE

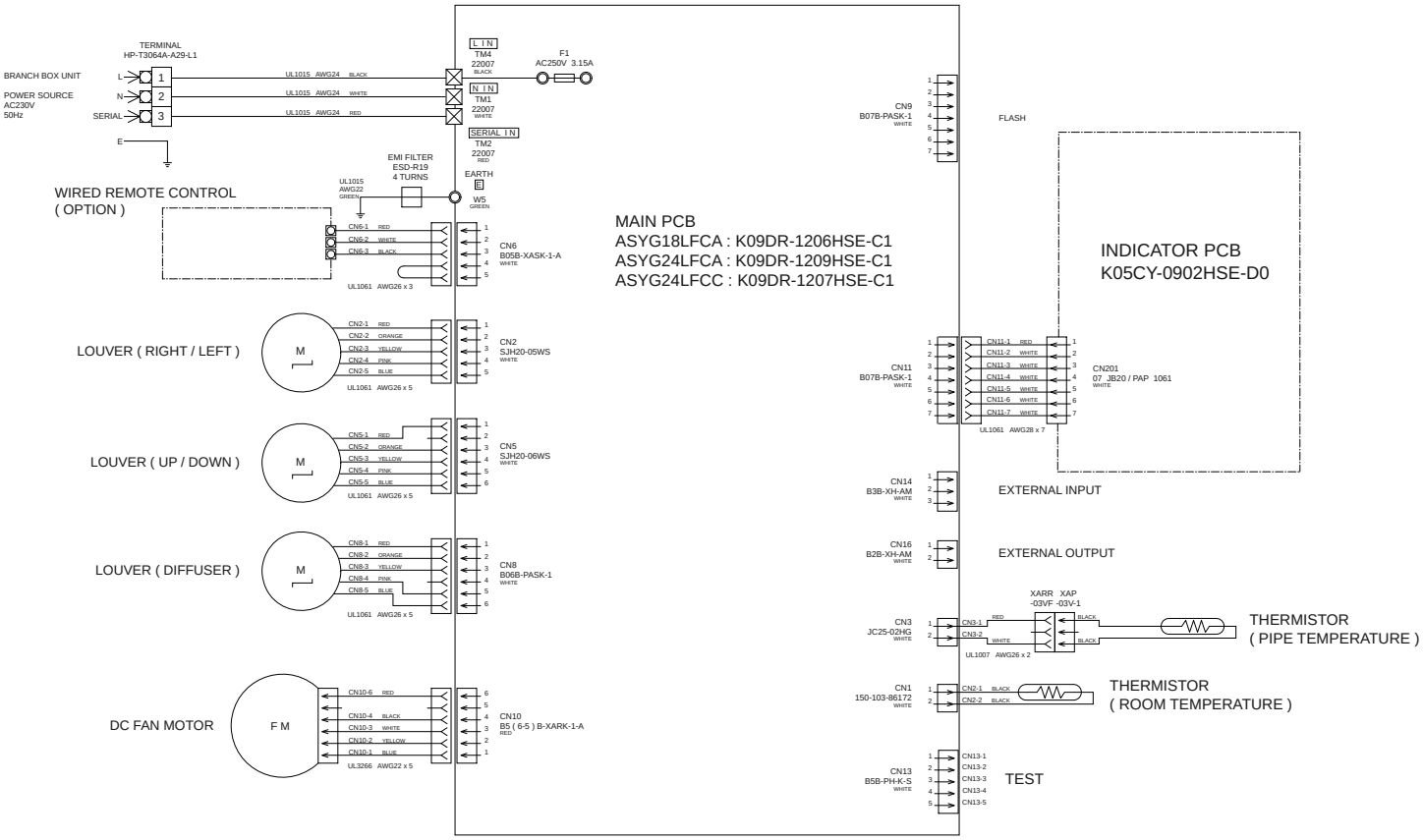

INDOOR UNIT
WALL MOUNTED
MAIN PCB
ASYG18LFCA : K09DR-1206HSE-C1
ASYG24LFCA : K09DR-1209HSE-C1
ASYG24LFCC : K09DR-1207HSE-C1

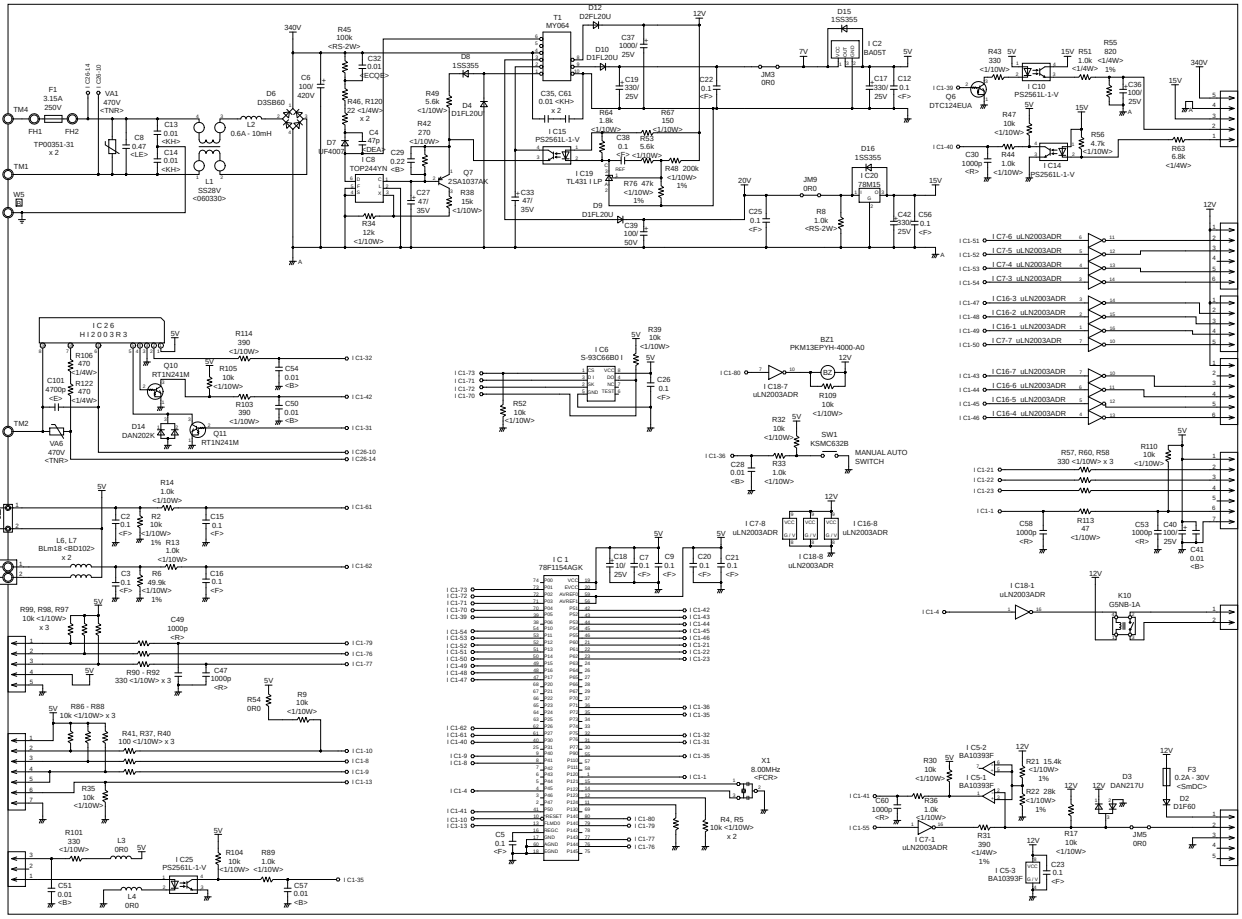

INDOOR UNIT
WALL MOUNTED
ASYG18LFCA
ASYG24LFCA
ASYG24LFCC
INDICATOR PCB
K05CY-0902HSE-D0

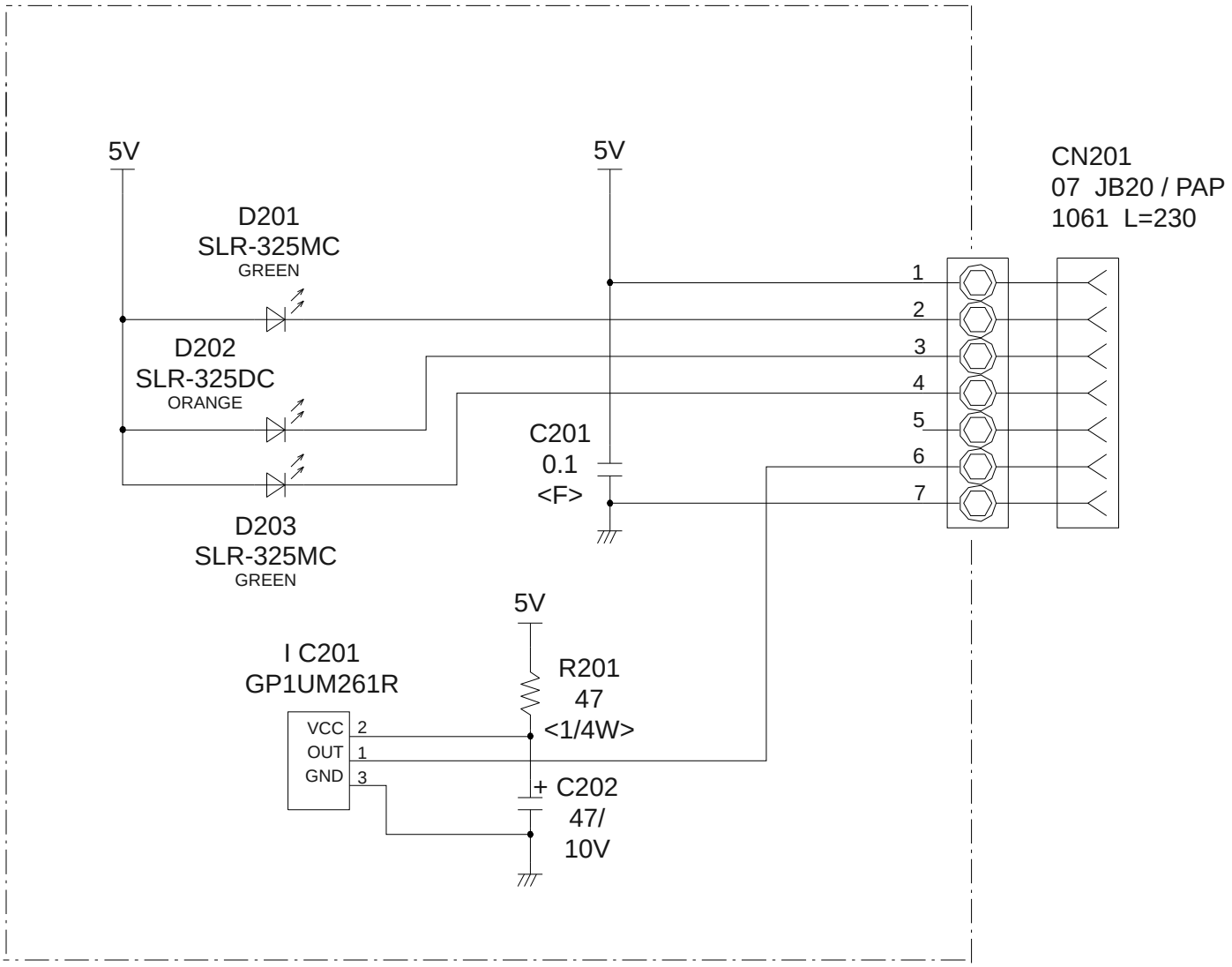

INDOOR UNIT
COMPACT CASSETTE
CONTROL UNIT
AUYG07LVLA : EZ-01004HSE
AUYG09LVLA : EZ-01005HSE
AUYG12LVLA : EZ-01006HSE
AUYG14LVLA : EZ-01007HSE
AUYG18LVLA : EZ-01008HSE
AUYG12LVLB : EZ-0122HHSE
AUYG14LVLB : EZ-0122KHSE
AUYG18LVLB : EZ-0122LHSE

MAIN PCB
AUYG07LVLA : K06AK-1007HSE-C1
AUYG09LVLA : K06AK-1008HSE-C1
AUYG12LVLA : K06AK-1009HSE-C1
AUYG14LVLA : K06AK-100AHSE-C1
AUYG18LVLA : K06AK-100BHSE-C1
AUYG12LVLB : K06AK-1216HSE-C1
AUYG14LVLB : K06AK-1217HSE-C1
AUYG18LVLB : K06AK-1218HSE-C1

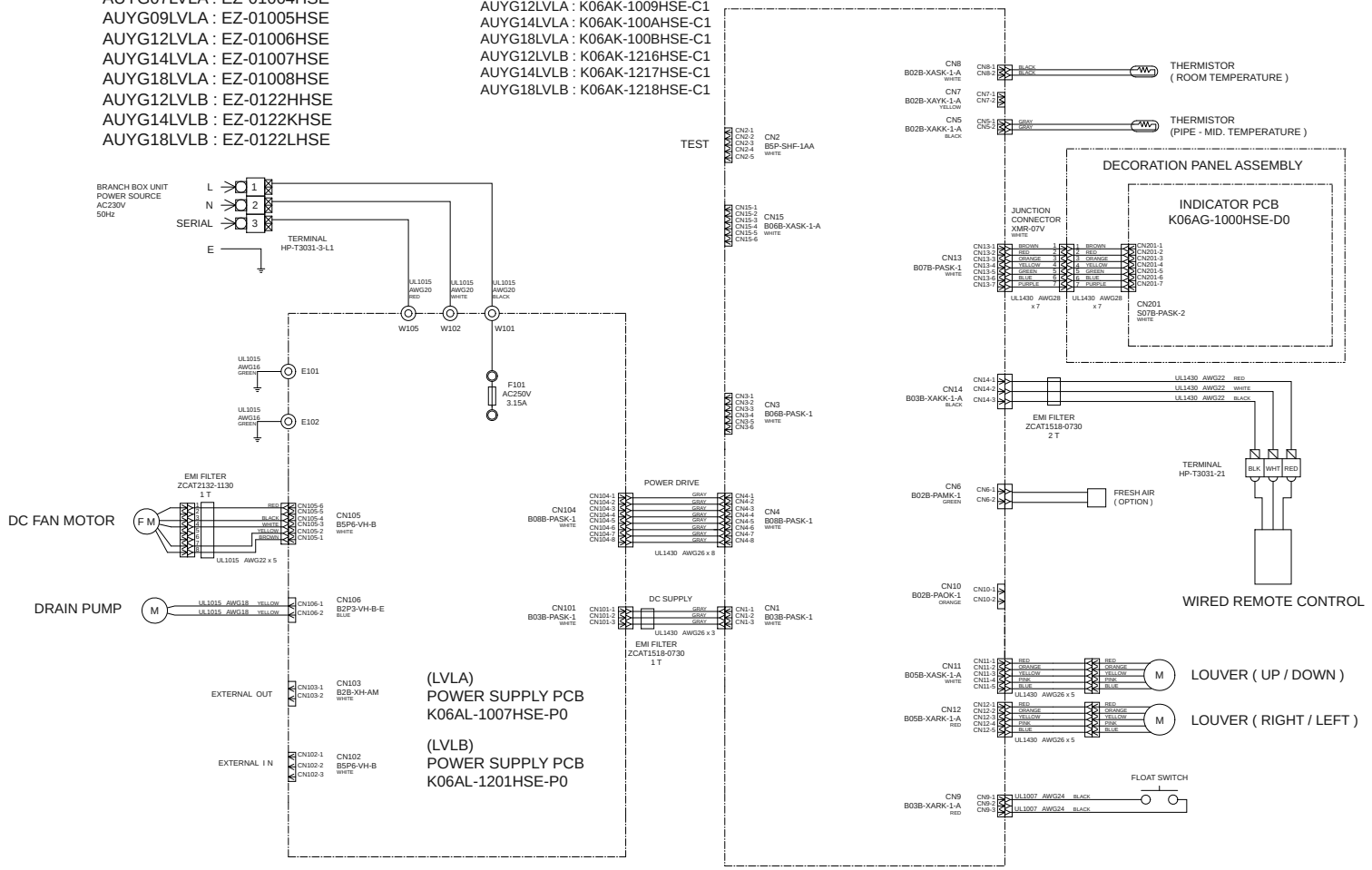

INDOOR UNIT
MAIN PCB

AUYG07LVLA : K06AK-1007HSE-C1
AUYG09LVLA : K06AK-1008HSE-C1
AUYG12LVLA : K06AK-1009HSE-C1
AUYG14LVLA : K06AK-100AHSE-C1
AUYG18LVLA : K06AK-100BHSE-C1

AUYG12LVLB : K06AK-1216HSE-C1
AUYG14LVLB : K06AK-1217HSE-C1
AUYG18LVLB : K06AK-1218HSE-C1

ARYG07LLTA : K06AK-100CHSE-C1
ARYG09LLTA : K06AK-100DHSE-C1
ARYG12LLTA : K06AK-100EHSE-C1
ARYG14LLTA : K06AK-100FHSE-C1
ARYG18LLTA : K06AK-100GHSE-C1
ARYG12LLTB : K06AK-1101HSE-C1
ARYG14LLTB : K06AK-1102HSE-C1
ARYG18LLTB : K06AK-1103HSE-C1
(Serial number : T)

ARYG07LLTA : K06AK-120KHSE-C1
ARYG09LLTA : K06AK-120LHSE-C1
ARYG12LLTB : K06AK-120MHSE-C1
ARYG14LLTB : K06AK-120PHSE-C1
ARYG18LLTB : K06AK-120RHSE-C1
(Serial number : R)

ABYG14LVTA : K06AK-100KHSE-C1
ABYG18LVTA : K06AK-100LHSE-C1
ABYG18LVTB : K06AK-1210HSE-C1

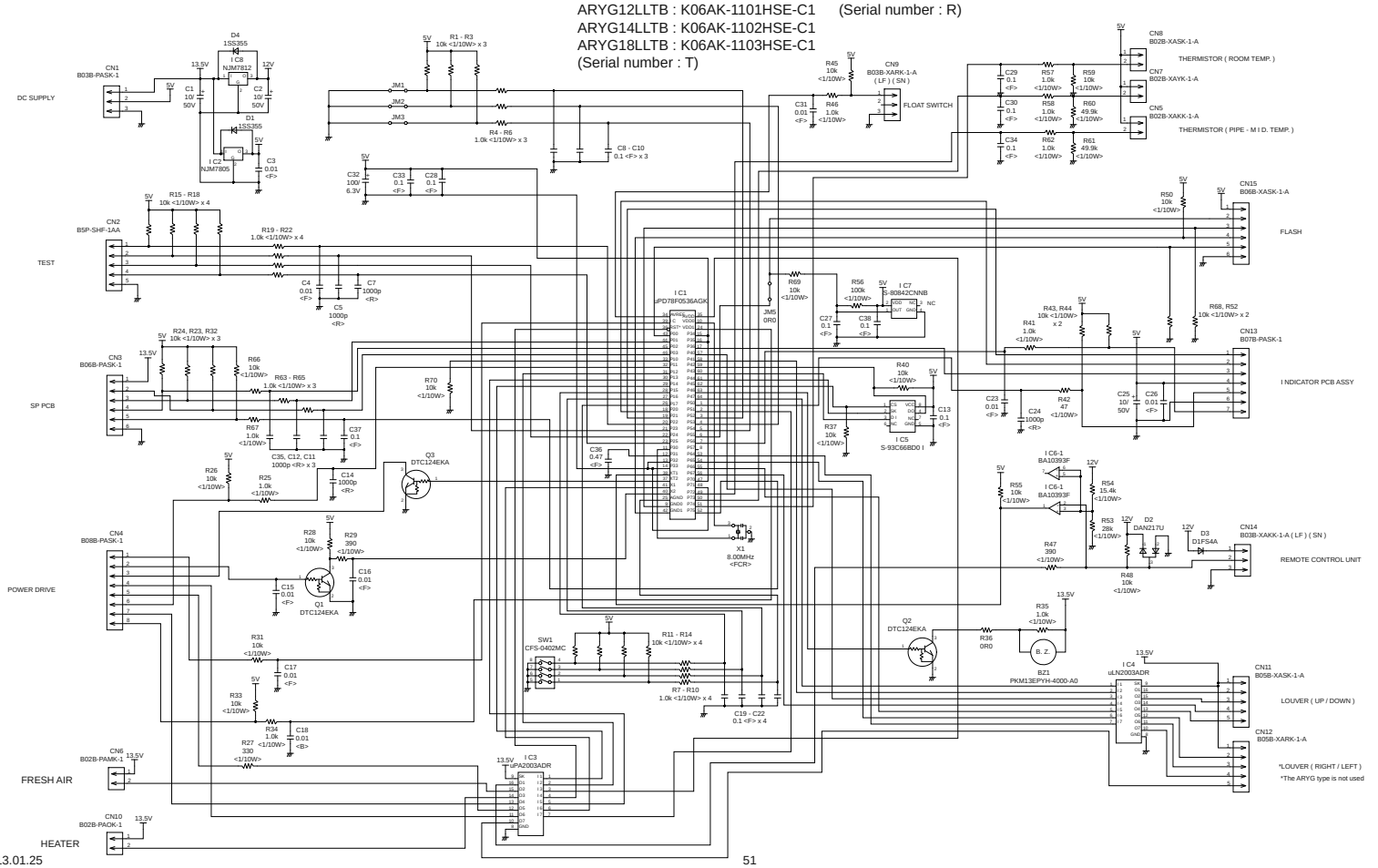

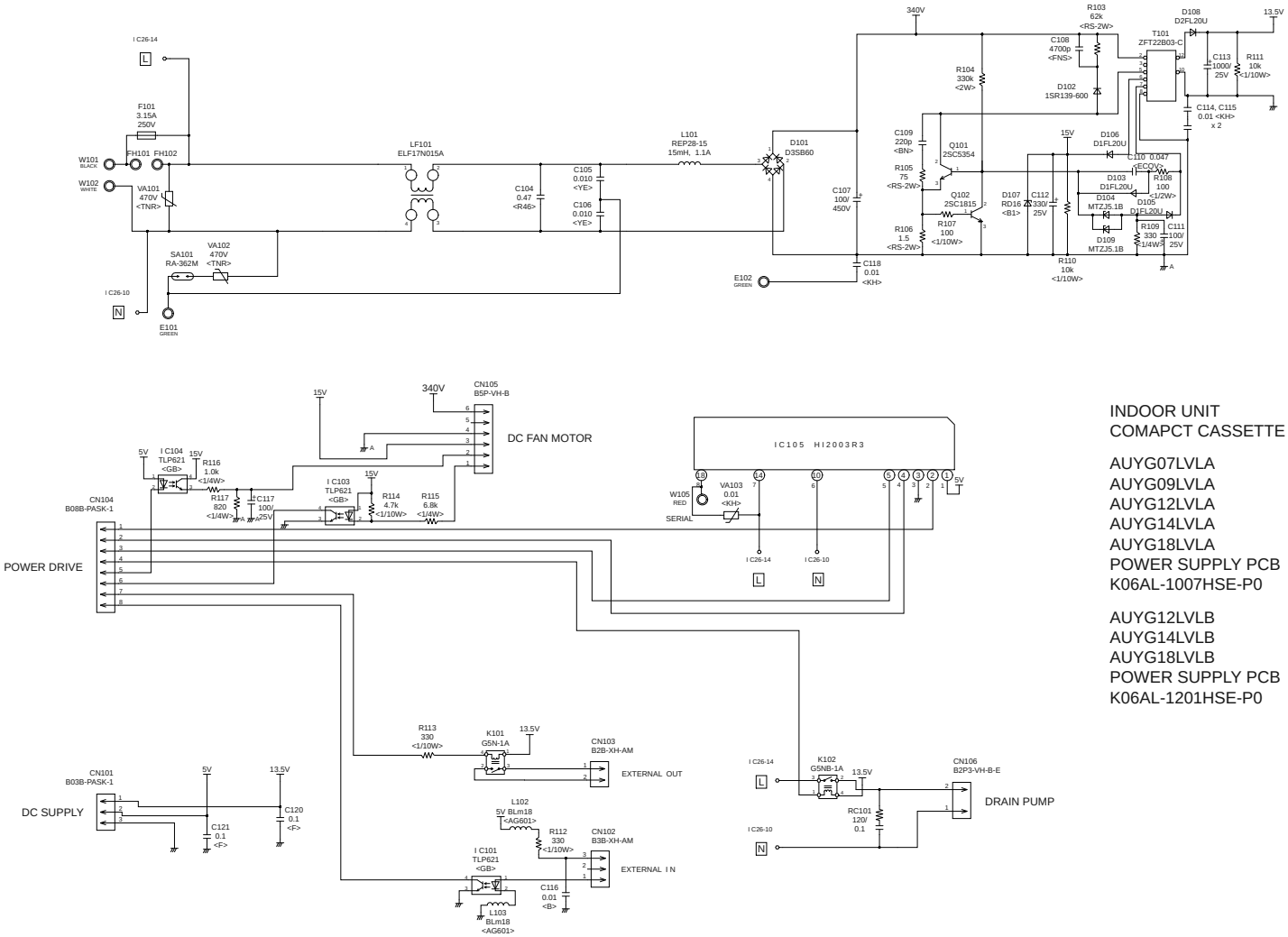

INDOOR UNIT
COMAPCT CASSETTE

AUYG07LVLA
AUYG09LVLA
AUYG12LVLA
AUYG14LVLA
AUYG18LVLA
POWER SUPPLY PCB
K06AL-1007HSE-P0

AUYG12LVLB
AUYG14LVLB
AUYG18LVLB
POWER SUPPLY PCB
K06AL-1201HSE-P0

INDOOR UNIT
COMPACT CASSETTE
AUYG07LVLA
AUYG09LVLA
AUYG12LVLA
AUYG14LVLA
AUYG18LVLA
AUYG12LVLB
AUYG14LVLB
AUYG18LVLB

INDICATOR PCB (OPTION)
K06AG-1000HSE-D0

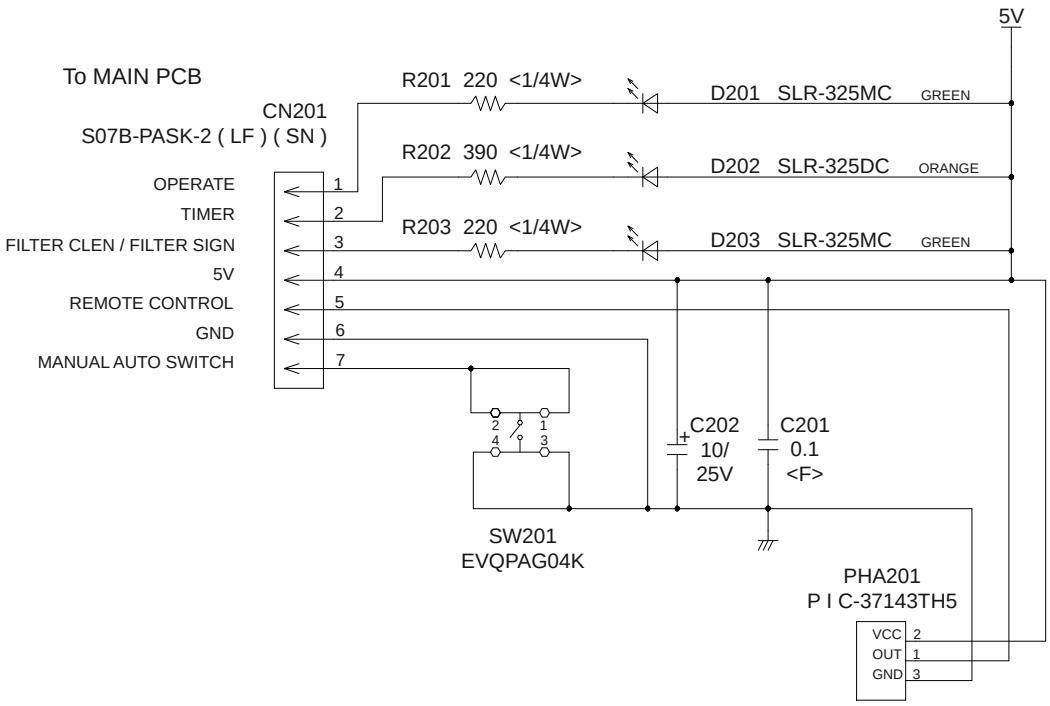

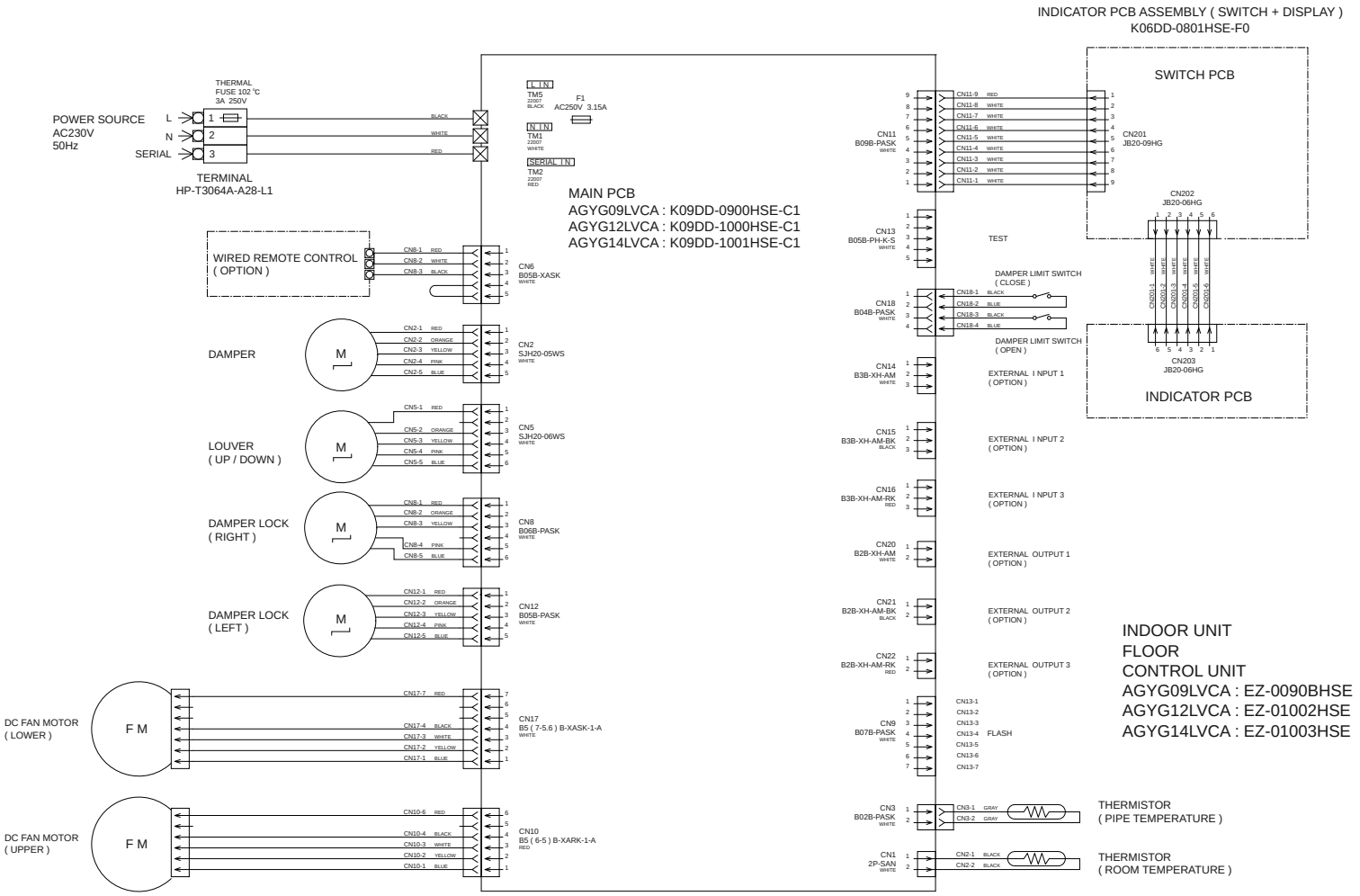
INDICATOR PCB ASSEMBLY (SWITCH + DISPLAY)
K06DD-0801HSE-F0
SWITCH PCB
INDICATOR PCB
MAIN PCB
AGYG09LVCA : K09DD-0900HSE-C1
AGYG12LVCA : K09DD-1000HSE-C1
AGYG14LVCA : K09DD-1001HSE-C1
POWER SOURCE
AC230V
50Hz
THERMAL
FUSE 102 ℃
3A 250V
TERMINAL
HP-T3064A-A28-L1
WIRED REMOTE CONTROL
(OPTION)
DAMPER
LOUVER
(UP / DOWN)
DAMPER LOCK
(RIGHT)
DAMPER LOCK
(LEFT)
DC FAN MOTOR
(LOWER)
DC FAN MOTOR
(UPPER)
F M
TEST
DAMPER LIMIT SWITCH
(CLOSE)
DAMPER LIMIT SWITCH
(OPEN)
EXTERNAL I NPUT 1
(OPTION)
EXTERNAL I NPUT 2
(OPTION)
EXTERNAL I NPUT 3
(OPTION)
EXTERNAL OUTPUT 1
(OPTION)
EXTERNAL OUTPUT 2
(OPTION)
EXTERNAL OUTPUT 3
(OPTION)
FLASH
THERMISTOR
(PIPE TEMPERATURE)
THERMISTOR
(ROOM TEMPERATURE)
INDOOR UNIT
FLOOR
CONTROL UNIT
AGYG09LVCA : EZ-0090BHSE
AGYG12LVCA : EZ-01002HSE
AGYG14LVCA : EZ-01003HSE

INDOOR UNIT
FLOOR
MAIN PCB
AGYG09LVCA : K09DD-0900HSE-C1
AGYG12LVCA : K09DD-1000HSE-C1
AGYG14LVCA : K09DD-1001HSE-C1

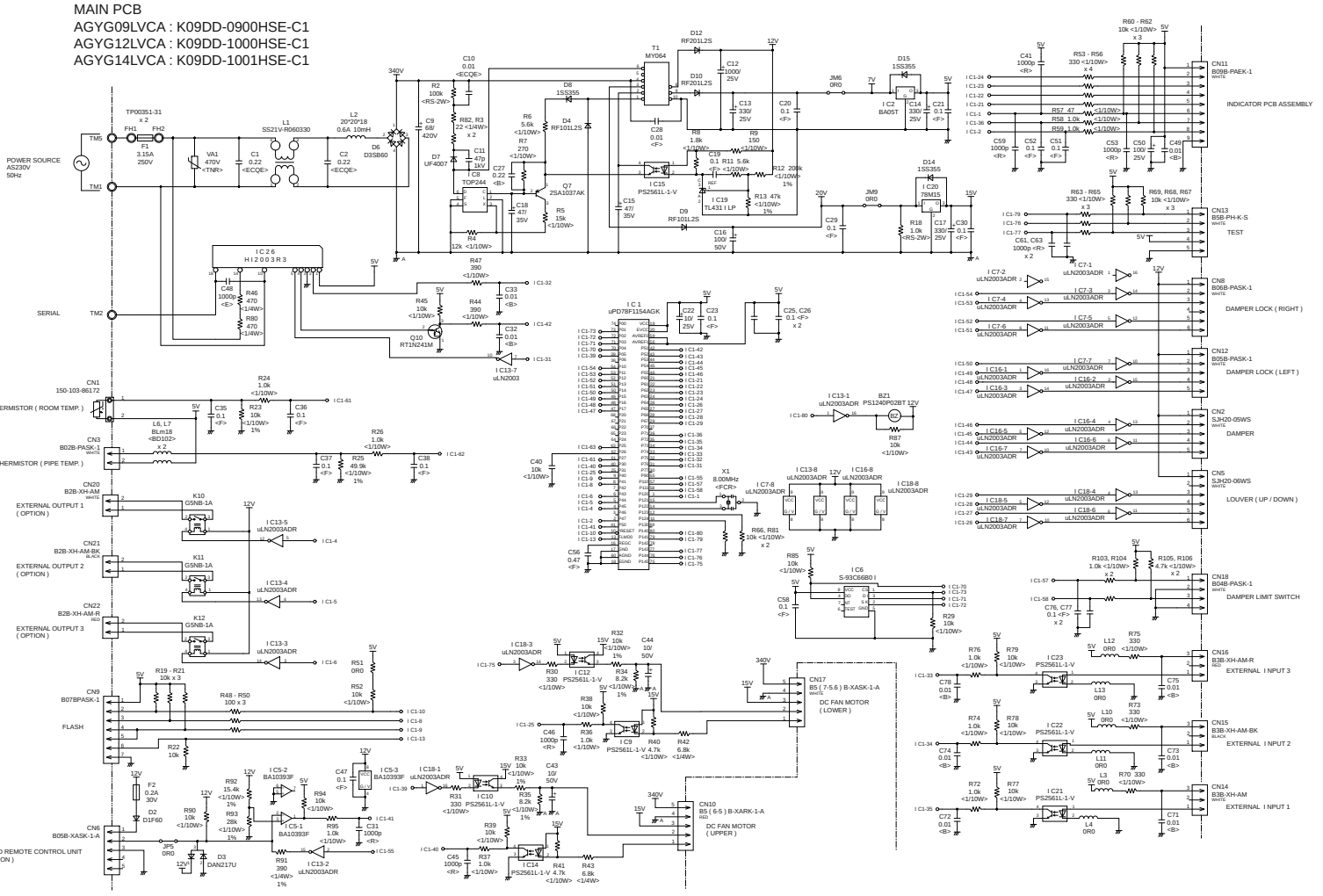

INDOOR UNIT
FLOOR
AGYG09LVCA
AGYG12LVCA
AGYG14LVCA

INDICATOR PCB
K06DD-0801HSE-F0

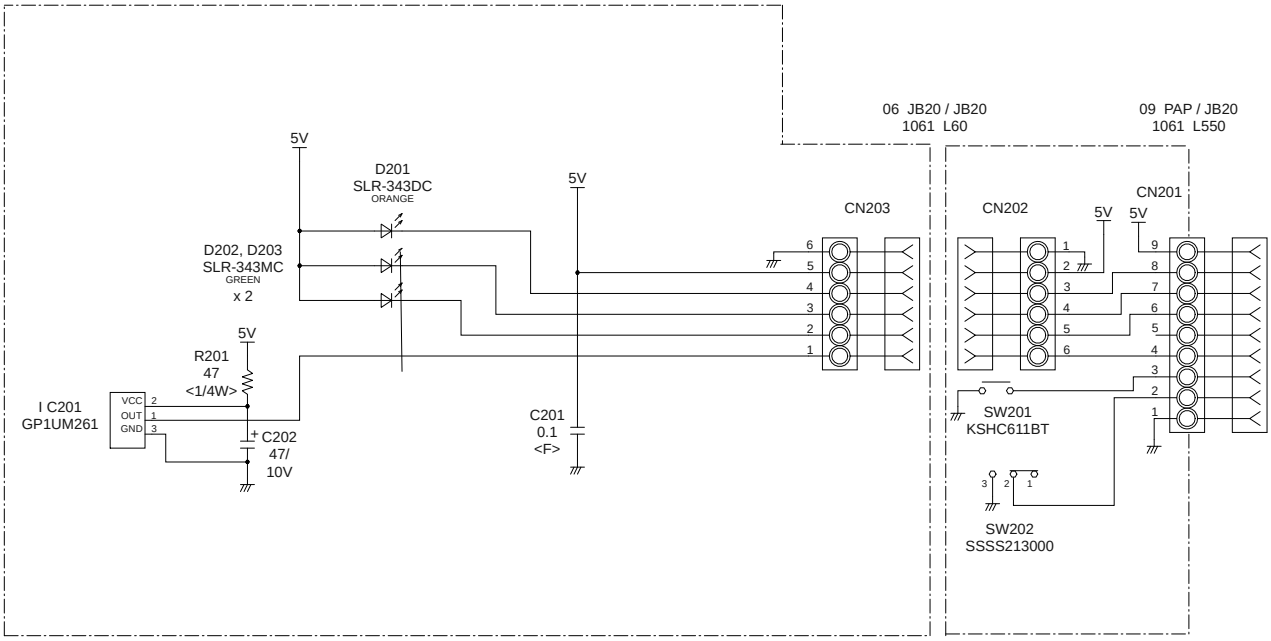

INDOOR UNIT
SLIM DUCT
CONTROL UNIT

ARYG07LLTA : EZ-01009HSE	ARYG07LLTA : EZ-01222HSE
ARYG09LLTA : EZ-0100AHSE	ARYG09LLTA : EZ-01223HSE
ARYG12LLTA : EZ-0100BHSE	ARYG12LLTB : EZ-01224HSE
ARYG14LLTA : EZ-0100CHSE	ARYG14LLTB : EZ-01225HSE
ARYG18LLTA : EZ-0100DHSE	ARYG18LLTB : EZ-01226HSE
ARYG12LLTB : EZ-01110HSE	(Serial number : R)
ARYG14LLTB : EZ-01111HSE	
ARYG18LLTB : EZ-01112HSE	
(Serial number : T)	

MAIN PCB

ARYG07LLTA : K06AK-100CHSE-C1	ARYG07LLTA : K06AK-120KHSE-C1
ARYG09LLTA : K06AK-100DHSE-C1	ARYG09LLTA : K06AK-120LHSE-C1
ARYG12LLTA : K06AK-100EHSE-C1	ARYG12LLTB : K06AK-120MHSE-C1
ARYG14LLTA : K06AK-100FHSE-C1	ARYG14LLTB : K06AK-120PHSE-C1
ARYG18LLTA : K06AK-100GHSE-C1	ARYG18LLTB : K06AK-120RHSE-C1
ARYG12LLTB : K06AK-1101HSE-C1	(Serial number : R)
ARYG14LLTB : K06AK-1102HSE-C1	
ARYG18LLTB : K06AK-1103HSE-C1	
(Serial number : T)	

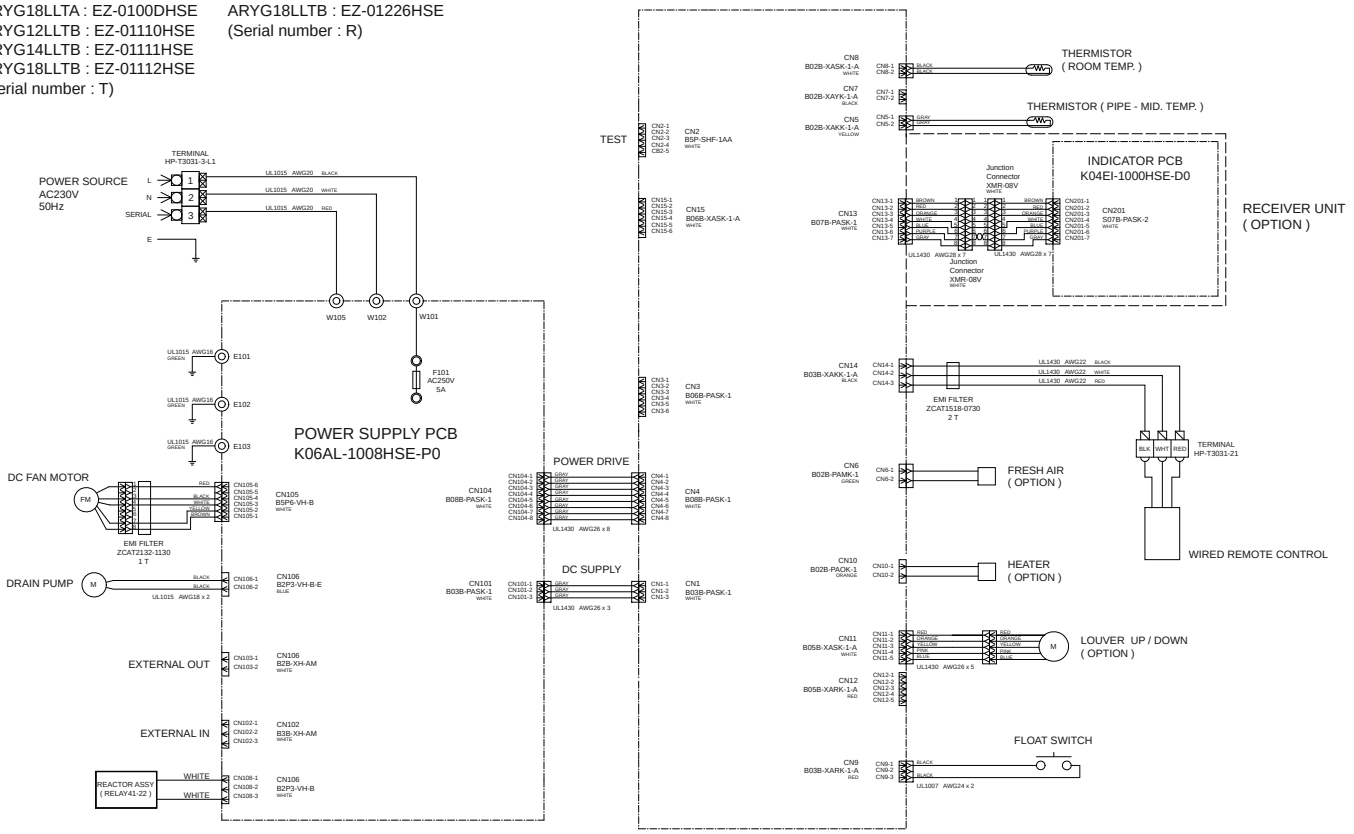

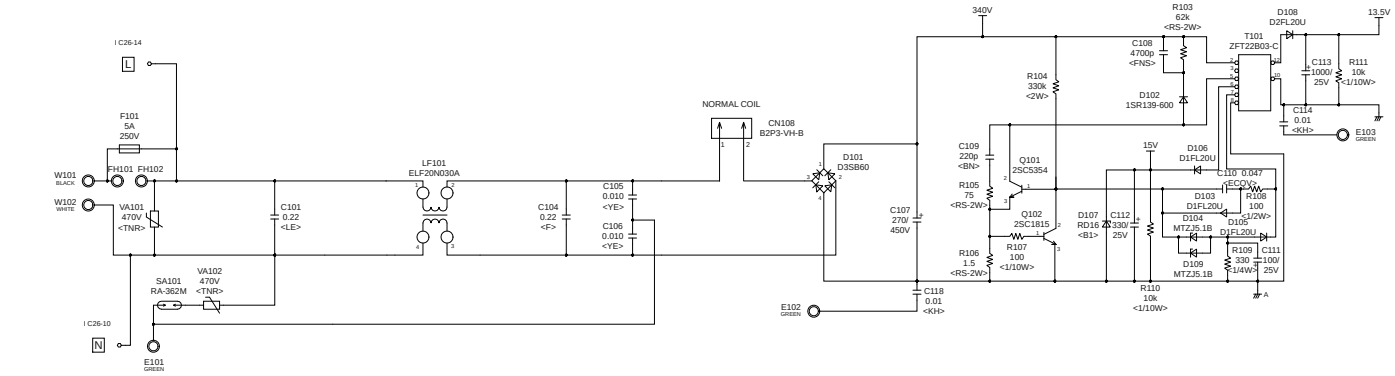

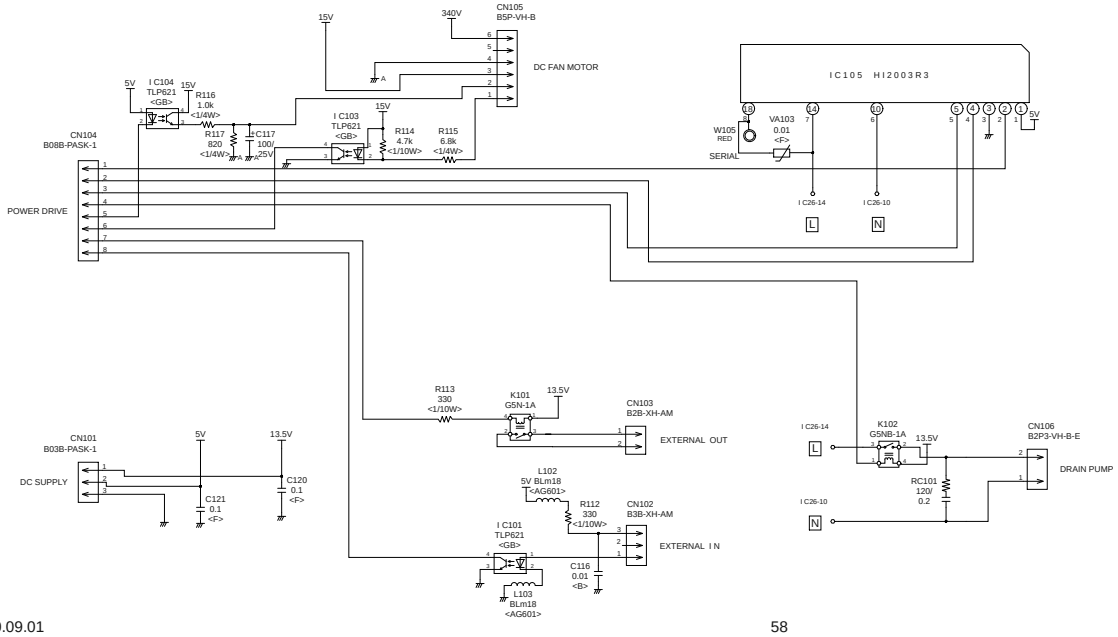

INDOOR UNIT
SLIM DUCT
ARYG07LLTA
ARYG09LLTA
ARYG12LLTA
ARYG14LLTA
ARYG18LLTA
ARYG12LLTB
ARYG14LLTB
ARYG18LLTB

POWER SUPPLY PCB
K06AL-1008HSE-P0

INDOOR UNIT
SLIM DUCT
ARYG07LLTA
ARYG09LLTA
ARYG12LLTA
ARYG14LLTA
ARYG18LLTA
ARYG12LLTB
ARYG14LLTB
ARYG18LLTB

INDICATOR PCB (OPTION)
K04EI-1000HSE-D0

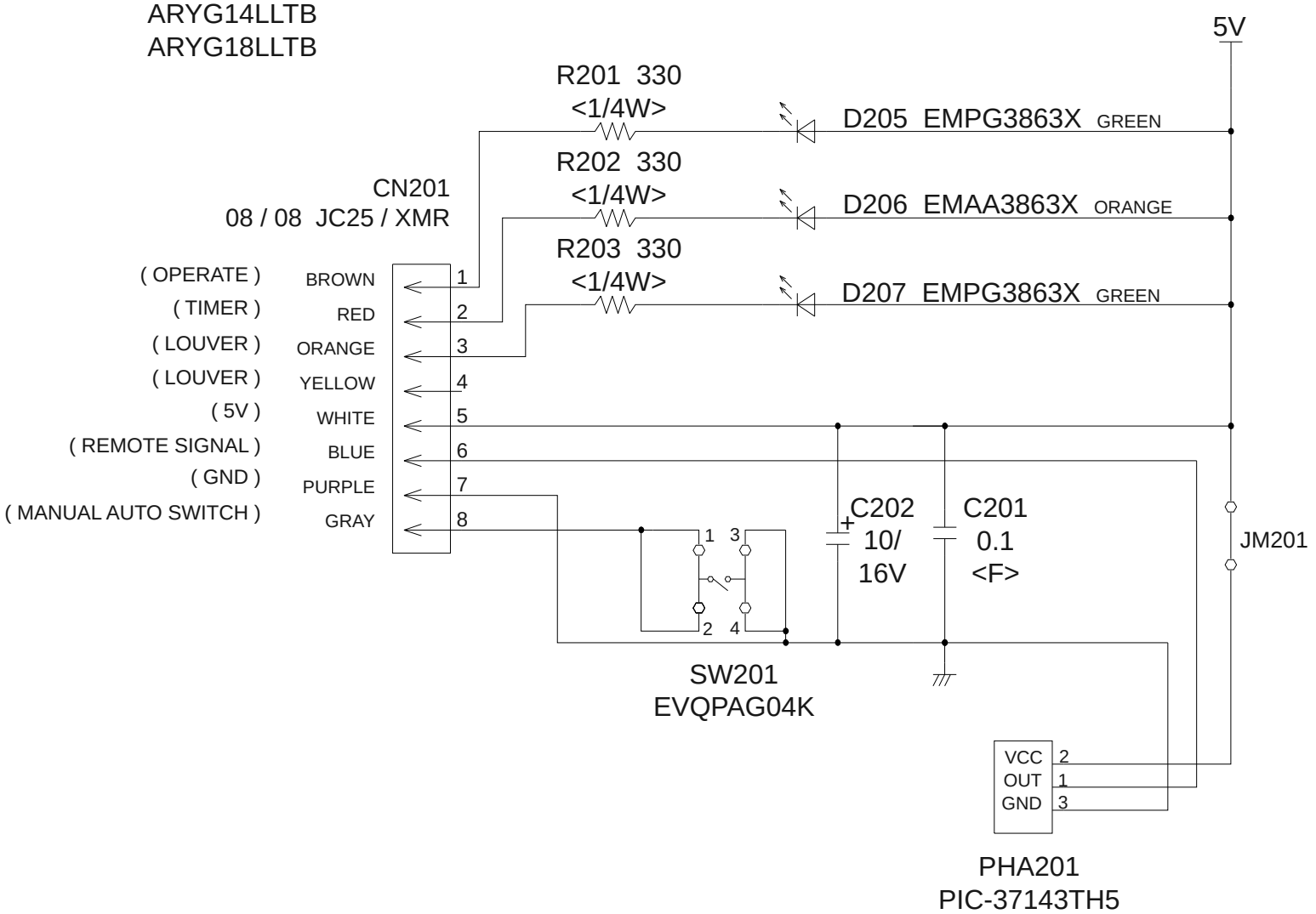

INDOOR UNIT
FLOOR / CEILING
CONTROL UNIT
ABYG14LVTA : EZ-0100FHSE
ABYG18LVTA : EZ-0100GHSE
ABYG18LVTB : EZ-0122BHSE

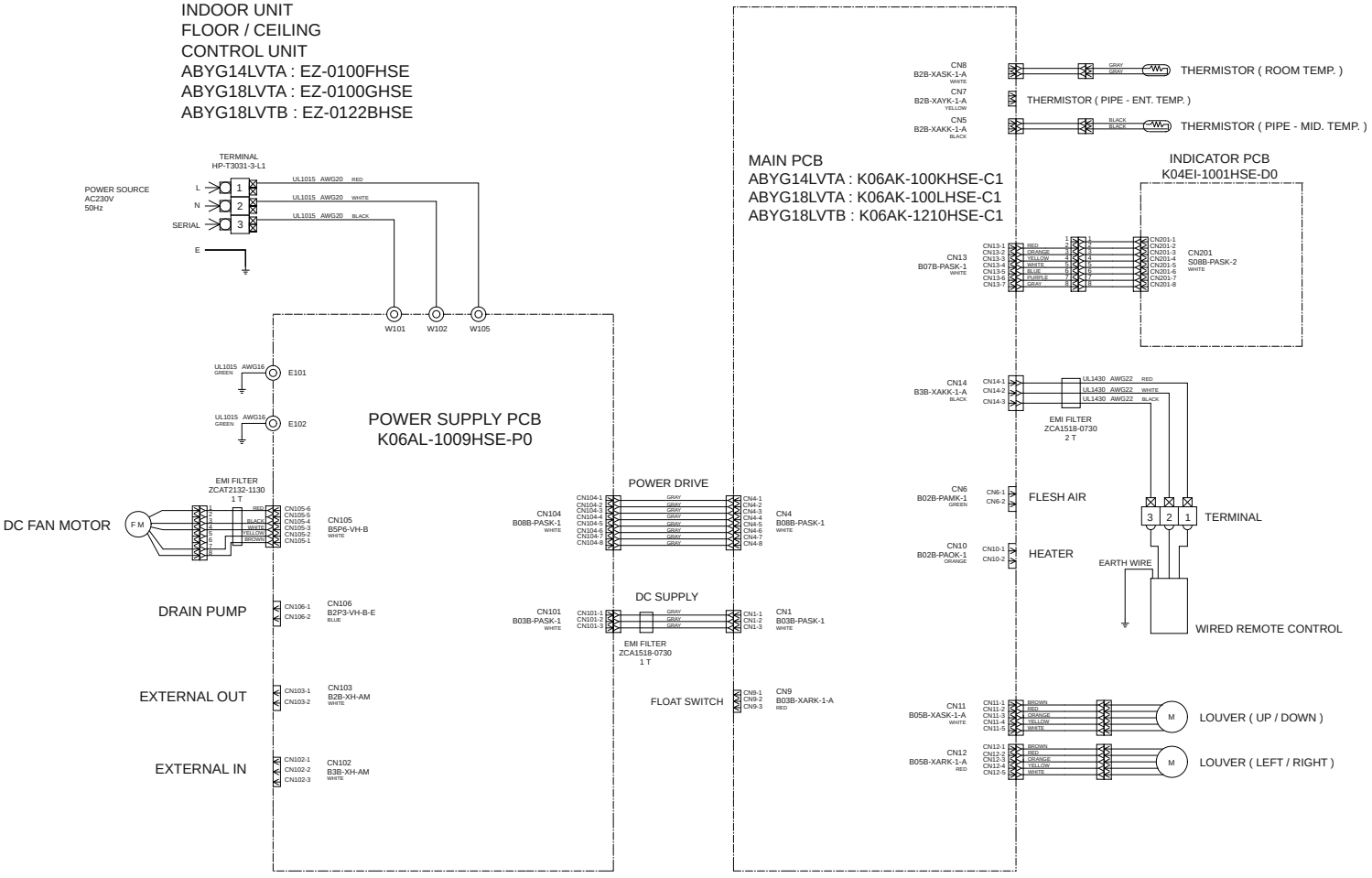

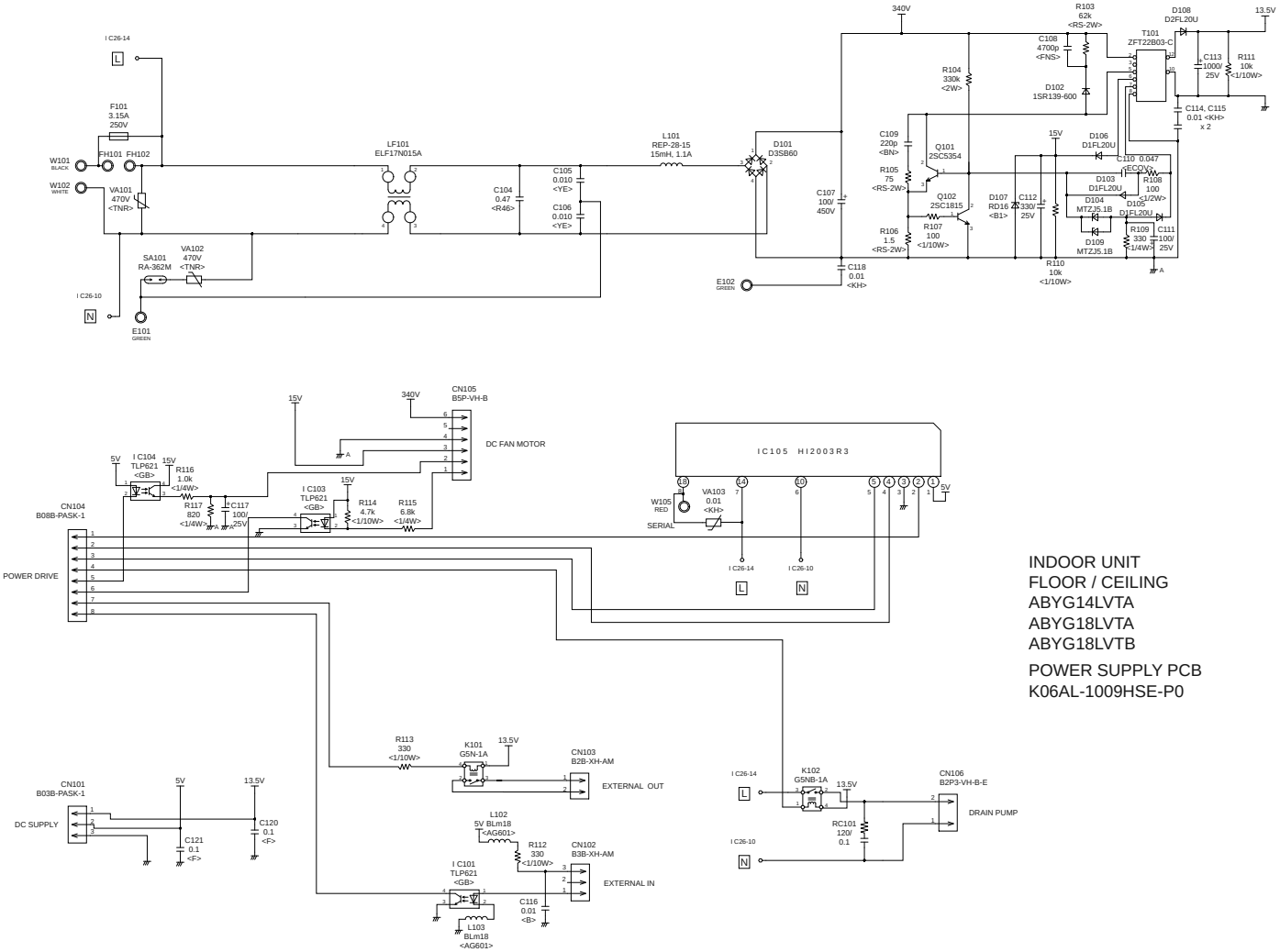

INDOOR UNIT
FLOOR / CEILING
ABYG14LVTA
ABYG18LVTA
ABYG18LVTB

POWER SUPPLY PCB
K06AL-1009HSE-P0

INDOOR UNIT
FLOOR / CEILING
ABYG14LVTA
ABYG18LVTA
ABYG18LVTB
INDICATOR PCB (OPTION)
K04EI-1001HSE-D0

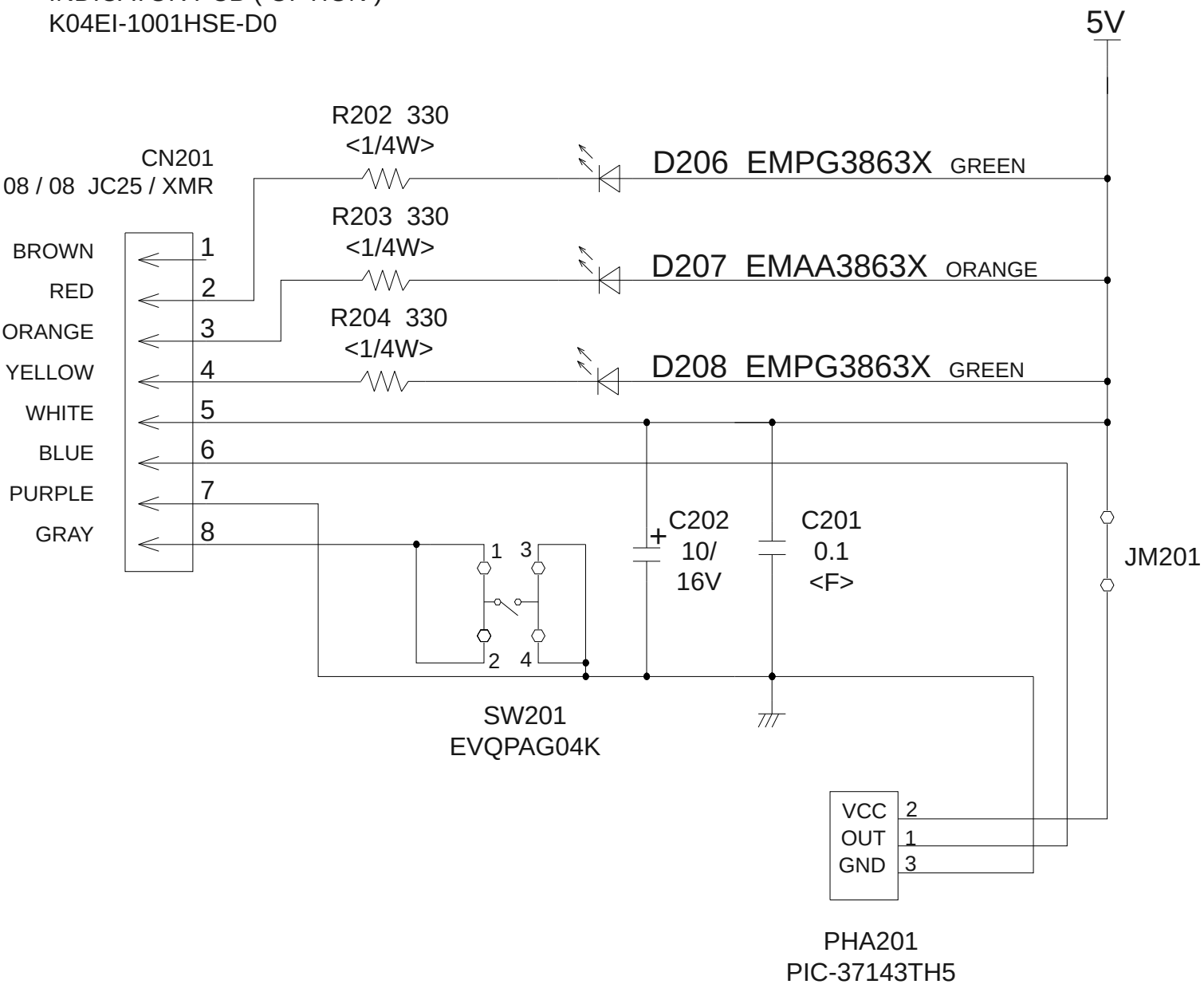

ERROR DETECTION

● : flashing
— : Off

OUTDOOR UNIT

	LED 1	LED 2	LED 3	LED 4
Communication error (outdoor unit to indoor unit A)	● 1 time	—	—	—
Communication error (outdoor unit to indoor unit B)	—	● 1 time	—	—
Communication error (outdoor unit to indoor unit C)	—	—	● 1 time	—
Communication error (outdoor unit to indoor unit D)	—	—	—	● 1 time
Discharge pipe thermistor	● 2 times	—	—	—
Outdoor unit, heat exchanger thermistor (middle)	● 3 times	—	—	—
Outdoor thermistor error	● 4 times	—	—	—
2-way valve thermistor (indoor unit A)	● 5 times	—	—	—
2-way valve thermistor (indoor unit B)	—	● 5 times	—	—
2-way valve thermistor (indoor unit C)	—	—	● 5 times	—
2-way valve thermistor (indoor unit D)	—	—	—	● 5 times
3-way valve thermistor (indoor unit A)	● 6 times	—	—	—
3-way valve thermistor (indoor unit B)	—	● 6 times	—	—
3-way valve thermistor (indoor unit C)	—	—	● 6 times	—
3-way valve thermistor (indoor unit D)	—	—	—	● 6 times
Compressor thermistor error	● 7 times	—	—	—
Heatsink thermistor error	● 8 times	—	—	—
High pressure switch 1 error	● 9 times	—	—	—
High pressure switch 2 error	● 10 times	—	—	—
Indoor unit capacity error	● 11 times	—	—	—
Trip detection	● 12 times	—	—	—
Compressor roter position detetion error	● 13 times	—	—	—
Trip terminal L error	● 14 times	—	—	—
Outdoor unit fan motor error	● 15 times	—	—	—
Outdoor unit PCB microcomputer communication error	● 17 times	—	—	—
Discharge temperature error	● 18 times	—	—	—
Compressor temperature error	● 19 times	—	—	—
4-way valve error	● 20 times	—	—	—
Outdoor unit PCB model information error	● 21 times	—	—	—
Active filter error, PFC circuit error	● 22 times	—	—	—

● : 0.5s on / 0.5s off

◇ : 0.1s on / 0.1s off

( ) : Number of flashing

INDOOR UNIT and WIRED REMOTE CONTROL

If you use a wireless remote control, the lamp on the photo detector unit will output error codes by way of blinking patterns.
If you use a wired type remote control, error codes will appear on the remote control display.
See the lamp blinking patterns and error codes in the table. An error display is displayed only during running.

This is possible only on a wired remote control.

If an error occurs, the following display will be shown.
("Er" will appear in the set room temperature display.)

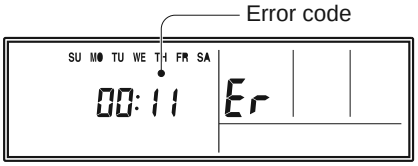

EX. Self-diagnosis

Indoor unit			Wired remote control	Description
OPERATION lamp (green)	TIMER lamp (orange)	ECONOMY lamp (green)		
●(1)	●(1)	◇	11	Serial communication error
●(1)	●(2)	◇	12	Wired remote control communication error
●(1)	●(5)	◇	15	Check run unfinished
●(2)	●(1)	◇	21	Unit number or Refrigerant circuit address setting error [Simultaneous Multi]
●(2)	●(2)	◇	22	Indoor unit capacity error
●(2)	●(3)	◇	23	Combination error
●(2)	●(4)	◇	24	• Connection unit number error (indoor slave unit) [Simultaneous Multi] • Connection unit number error (indoor unit or branch unit) [Flexible Multi]
●(2)	●(7)	◇	27	Master unit, slave unit set-up error [Simultaneous Multi]
●(3)	●(2)	◇	32	Indoor unit PCB model information error
●(3)	●(5)	◇	35	Manual auto switch error
●(4)	●(1)	◇	41	Inlet air temp. sensor error
●(4)	●(2)	◇	42	Indoor unit Heat Ex. Middle temp. sensor error
●(5)	●(1)	◇	51	Indoor unit fan motor error
●(5)	●(3)	◇	53	Drain pump error
●(5)	●(7)	◇	57	Damper error
●(5)	●(15)	◇	5U	Indoor unit error
●(6)	●(2)	◇	62	Outdoor unit main PCB model information error or communication error
●(6)	●(3)	◇	63	Inverter error
●(6)	●(4)	◇	64	Active filter error, PFC circuit error
●(6)	●(5)	◇	65	Trip terminal L error
●(6)	●(10)	◇	6A	Display PCB microcomputers communication error
●(7)	●(1)	◇	71	Discharge temp. sensor error
●(7)	●(2)	◇	72	Compressor temp. sensor error
●(7)	●(3)	◇	73	Outdoor unit Heat Ex. liquid temp. sensor error
●(7)	●(4)	◇	74	Outdoor temp. sensor error
●(7)	●(5)	◇	75	Suction Gas temp. sensor error
●(7)	●(6)	◇	76	• 2-way valve temp. sensor error • 3-way valve temp. sensor error
●(7)	●(7)	◇	77	Heat sink temp. sensor error
●(8)	●(2)	◇	82	• Sub-cool Heat Ex. gas inlet temp. sensor error • Sub-cool Heat Ex. gas outlet temp. sensor error
●(8)	●(3)	◇	83	Liquid pipe temp. sensor error
●(8)	●(4)	◇	84	Current sensor error
●(8)	●(6)	◇	86	• Discharge pressure sensor error • Suction pressure sensor error • High pressure switch error
●(9)	●(4)	◇	94	Trip detection
●(9)	●(5)	◇	95	Compressor rotor position detection error (permanent stop)
●(9)	●(7)	◇	97	Outdoor unit fan motor error
●(9)	●(9)	◇	99	4-way valve error
●(10)	●(1)	◇	A1	Discharge temp. error
●(10)	●(3)	◇	A3	Compressor temp. error
●(10)	●(4)	◇	A4	High pressure error
●(10)	●(5)	◇	A5	Low pressure error
●(13)	●(2)	◇	J2	Branch boxes error [Flexible Multi]

PARTS

OUTDOOR UNIT

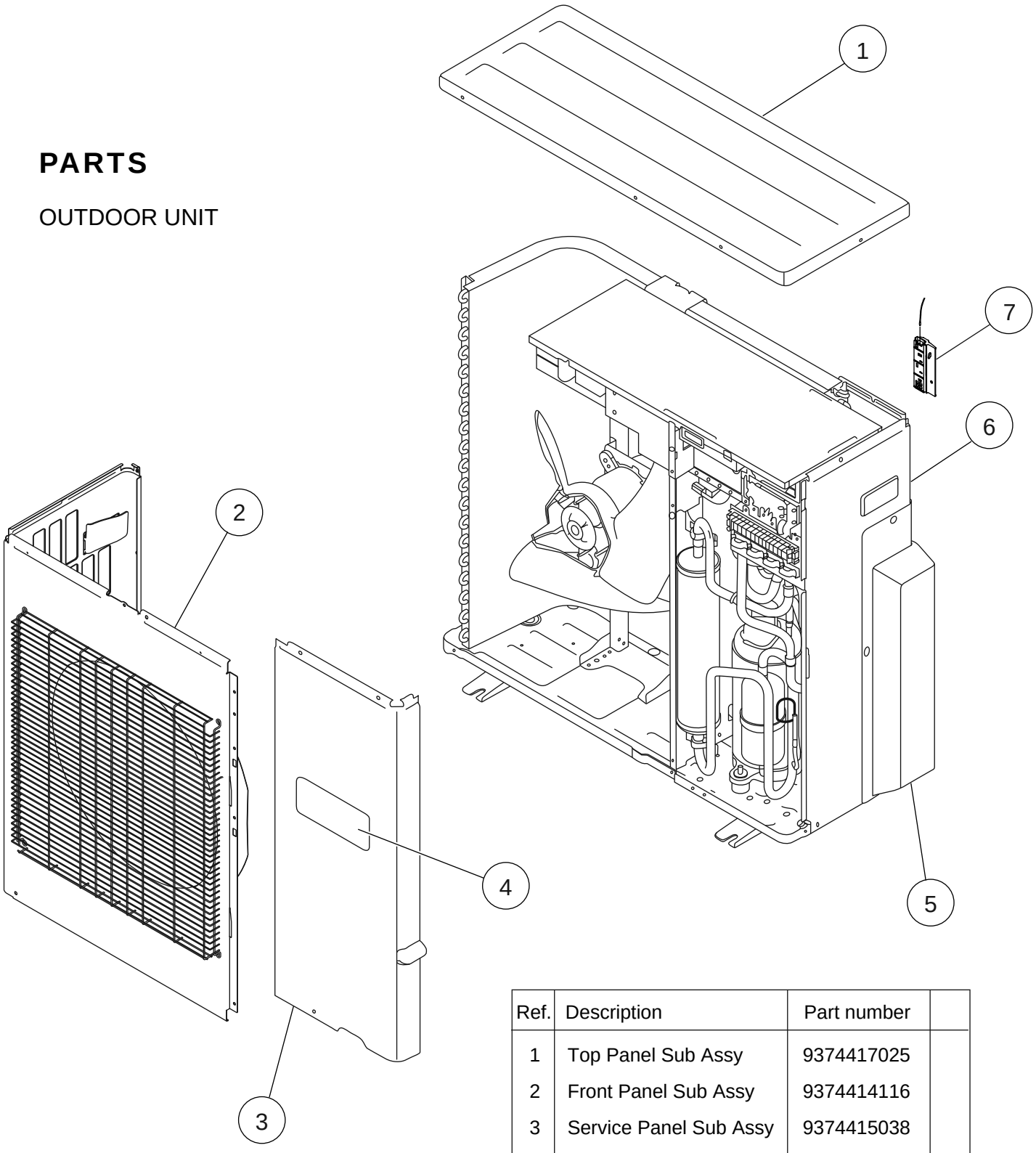

Ref.	Description	Part number	
1	Top Panel Sub Assy	9374417025	
2	Front Panel Sub Assy	9374414116	
3	Service Panel Sub Assy	9374415038	
4	Emblem Rear	9351355005	
5	Valve Cover Sub Assy	9374827015	
6	Right Panel Sub Assy	9374416059	
7	Thermo holder	9374177011	
--	Protective Net	9375381011	

OUTDOOR UNIT

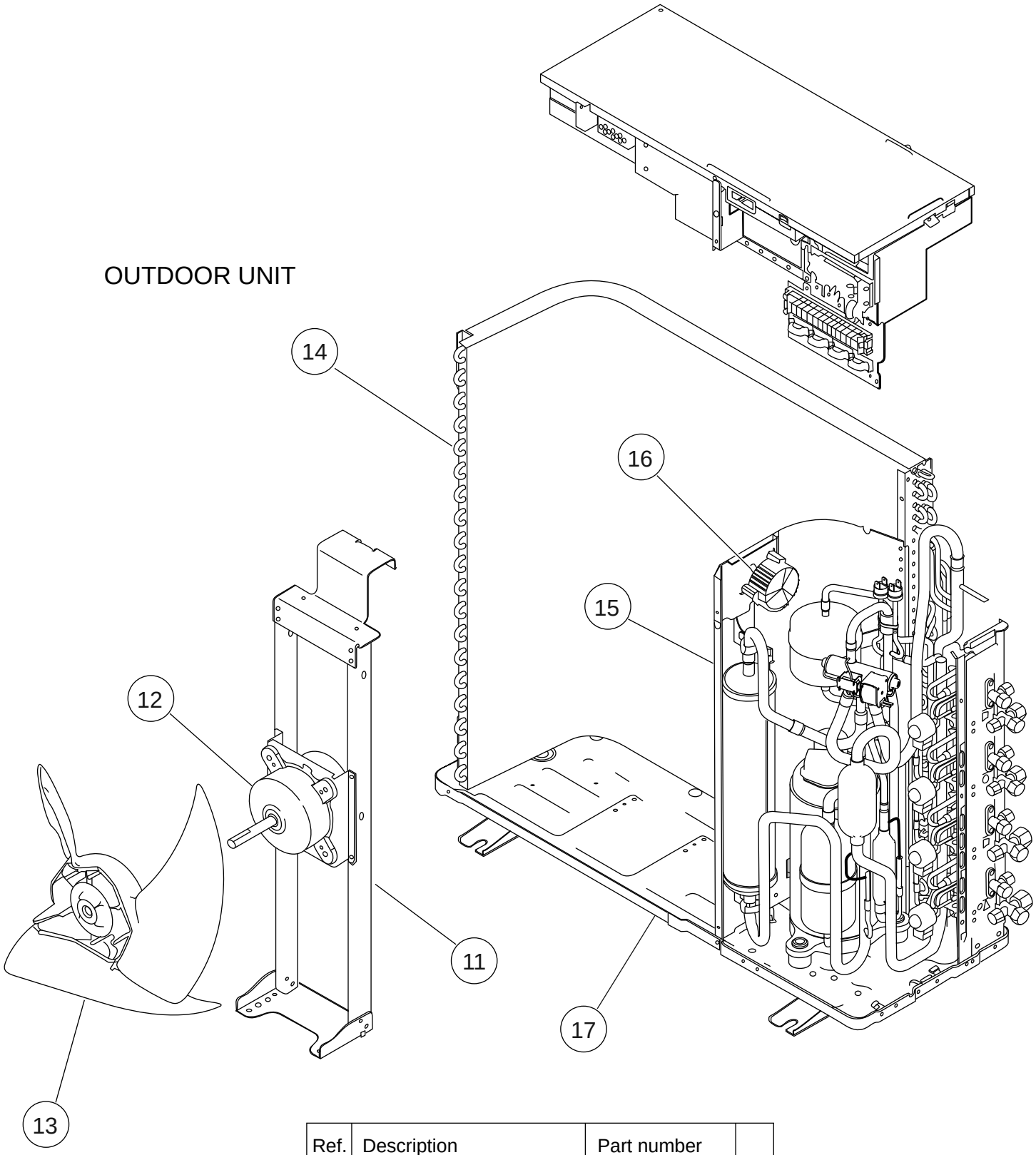

Ref.	Description	Part number	
11	Motor Bracket Sub Assy	9374418053	
12	Fan Motor	9602843015	
13	Propeller Fan Assy	9366378020	
14	Condenser A Assy	9374433056	
15	Separate Wall Sub Assy	9374413065	
16	Choke Coil	9703458019	
17	Base Assy	9374166084	
--	Drain Assy	9303029015	
--	Drain Cap	313166024302	

OUTDOOR UNIT

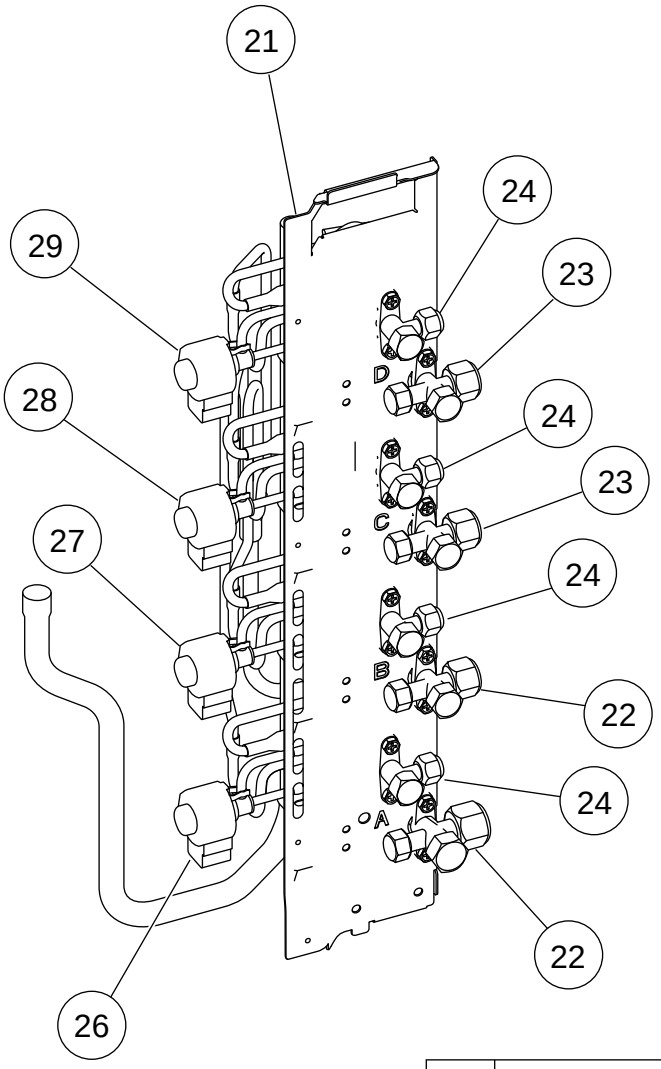

Connector :RED

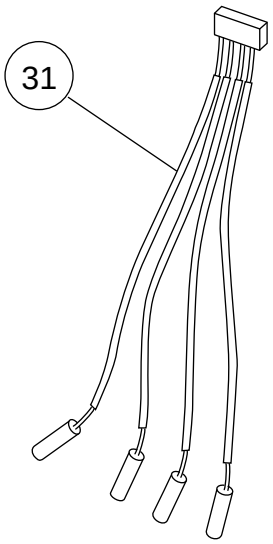

WHITE

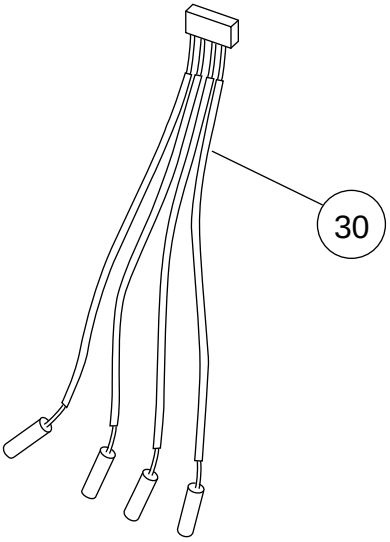

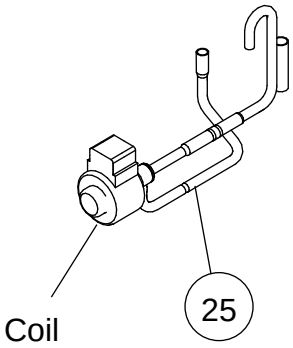

Ref.	Description	Part number	
21	Valve Plate A Assy	9374628025	
22	3-way Valve Assy (1/2")	9378282018	
23	3-way Valve Assy (3/8")	9377958013	
24	2-way Valve Assy	9375614027	
25	Expansion Valve Assy	9370947151	
26	Expansion Valve Coil (A=Red)	9970101069	
27	Expansion Valve Coil (B=White)	9970101038	
28	Expansion Valve Coil (C=Green)	9970101045	
29	Expansion Valve Coil (D=Blue)	9970101052	
30	Pipe Thermistor (White)	9900543020	
31	Pipe Thermistor (Red)	9900543013	

OUTDOOR UNIT

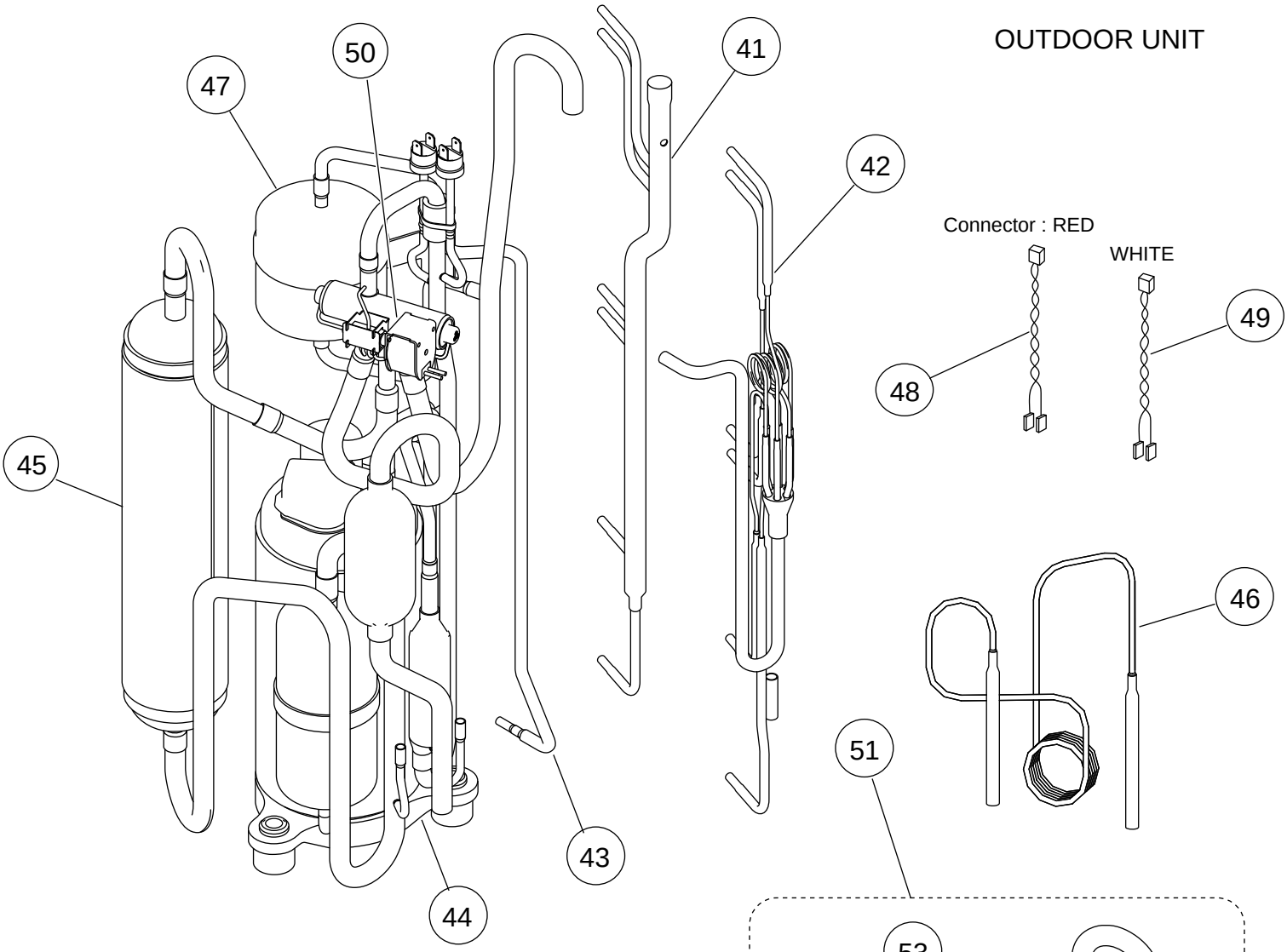

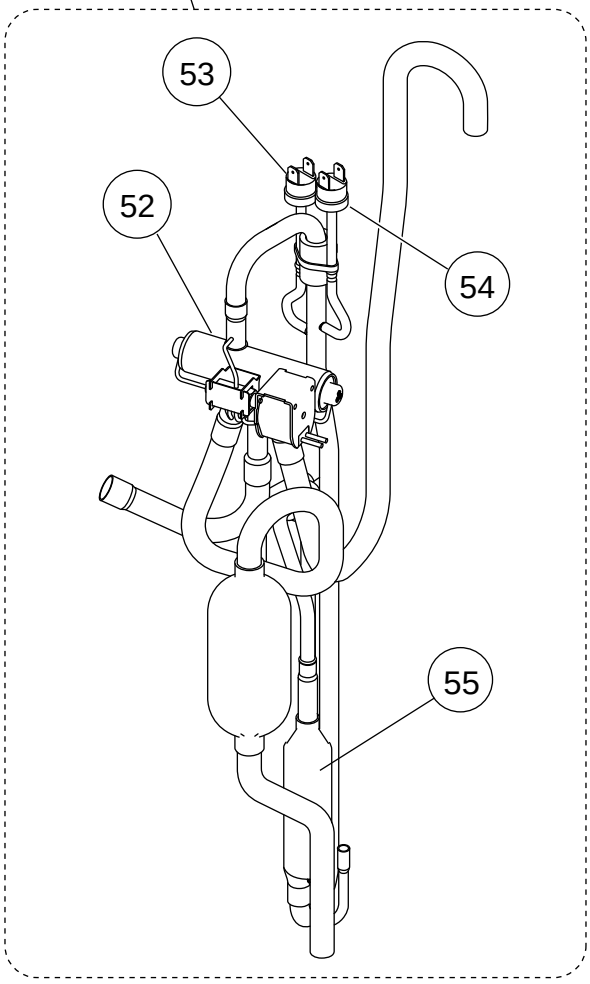

Ref.	Description	Part number	
41	Inlet Pipe Assy	9373461067	
42	Outlet Pipe Assy	9374266067	
43	Condensing Pipe A	9372232057	
44	Compressor Assy	9377946010	
45	Accumulator Sub Assy	9374426072	
46	Capillary Assy	9372197370	
47	Receiver Tank Sub Assy	9373426028	
48	Pressure Switch Wire (Red)	9367595037	
49	Pressure Switch Wire (White)	9367595044	
50	Solenoid	9900165055	
51	4-way Valve Sub Assy	9374425204	
52	4-way Valve	9900164010	
53	Pressure Switch	9900186012	
54	Pressure Switch	9900341015	
55	Discharge Pipe Assy	9372264225	
--	Strainer Assy	9372524015	

OUTDOOR UNIT

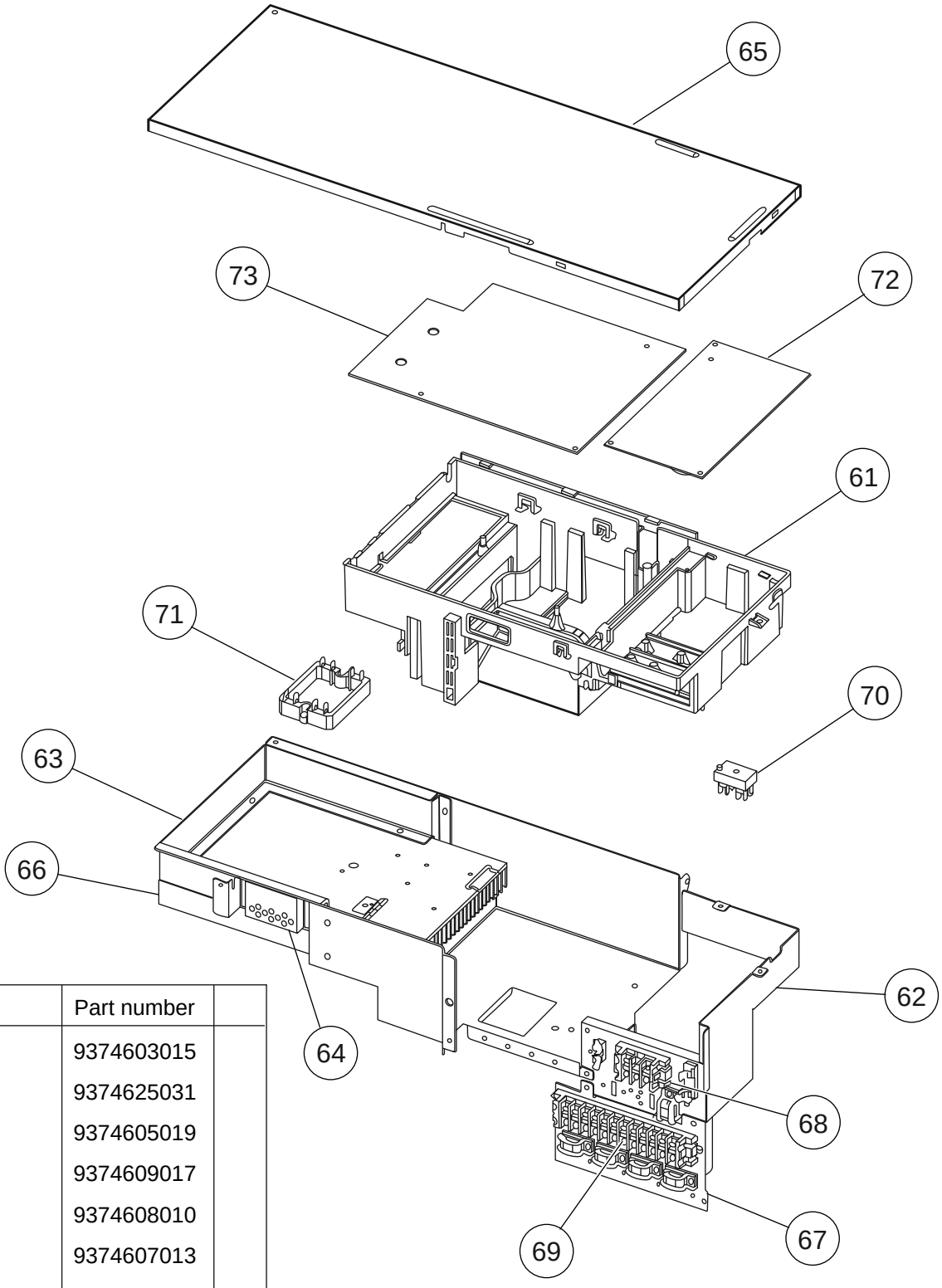

Ref.	Description	Part number	
61	Inverter Box A	9374603015	
62	Inverter Box B Assy	9374625031	
63	Inverter Box C	9374605019	
64	Inverter Box Duct	9374609017	
65	Inverter Box Cover	9374608010	
66	Heat Sink A	9374607013	
67	Inverter Box D	9374606054	
68	Terminal (3P)	9900203016	
69	Terminal (12P)	9358660164	
70	Terminal	9900433017	
71	ACTPM	9703457012	
72	Power Supply PCB Assy	9705647039	
73	Controller PCB Assy	9709091265	
74	Heat Sink Thermistor	9900311018	
75	Discharge Thermistor	9900620004	
76	Thermistor (Outdoor)	9900477035	
77	Heat Exchanger Thermistor	9900540005	
78	Discharge Pipe Thermistor	9900621001	

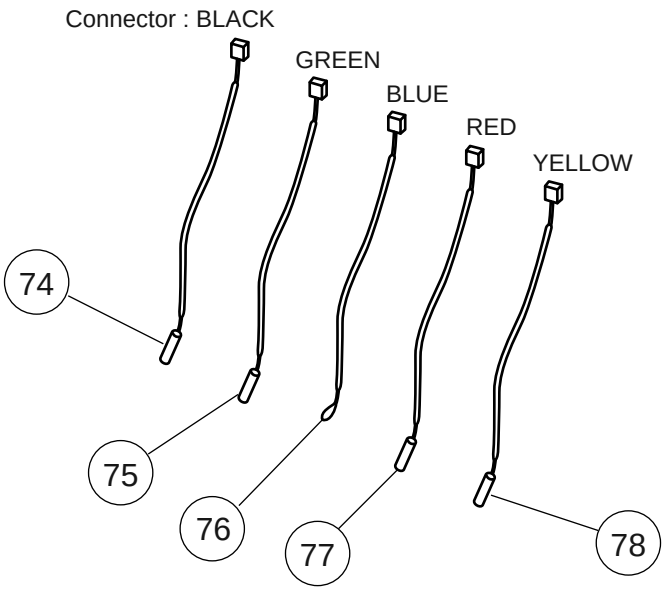

PARTS

INDOOR UNIT
COMPACT WALL MOUNTED
ASYG07LJCA
ASYG09LJCA
ASYG12LJCA

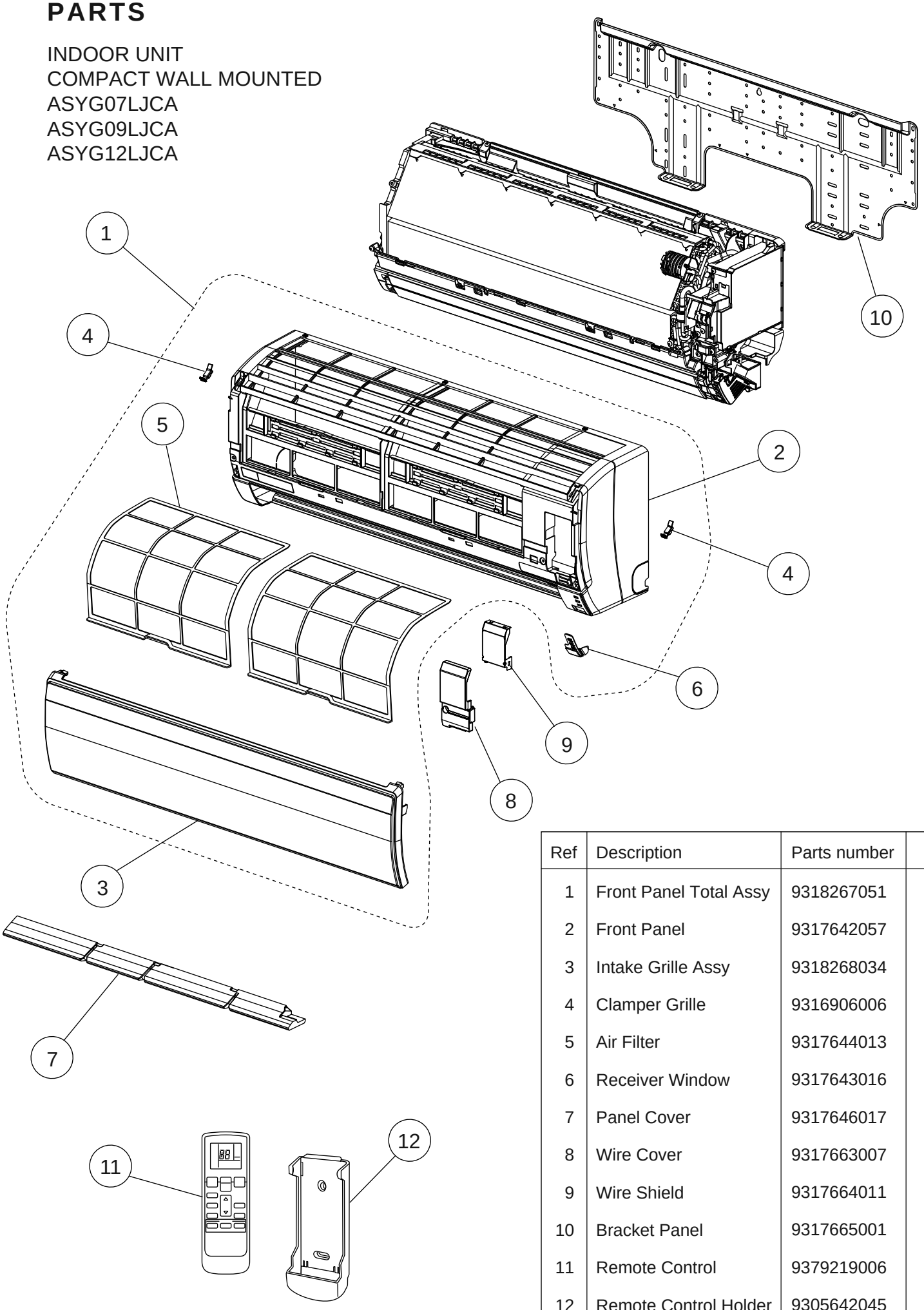

Ref	Description	Parts number	
1	Front Panel Total Assy	9318267051	
2	Front Panel	9317642057	
3	Intake Grille Assy	9318268034	
4	Clamper Grille	9316906006	
5	Air Filter	9317644013	
6	Receiver Window	9317643016	
7	Panel Cover	9317646017	
8	Wire Cover	9317663007	
9	Wire Shield	9317664011	
10	Bracket Panel	9317665001	
11	Remote Control	9379219006	
12	Remote Control Holder	9305642045	
--	Air Clean Filter Assy	9317250009	

INDOOR UNIT
COMPACT WALL MOUNTED
ASYG07LJCA
ASYG09LJCA
ASYG12LJCA

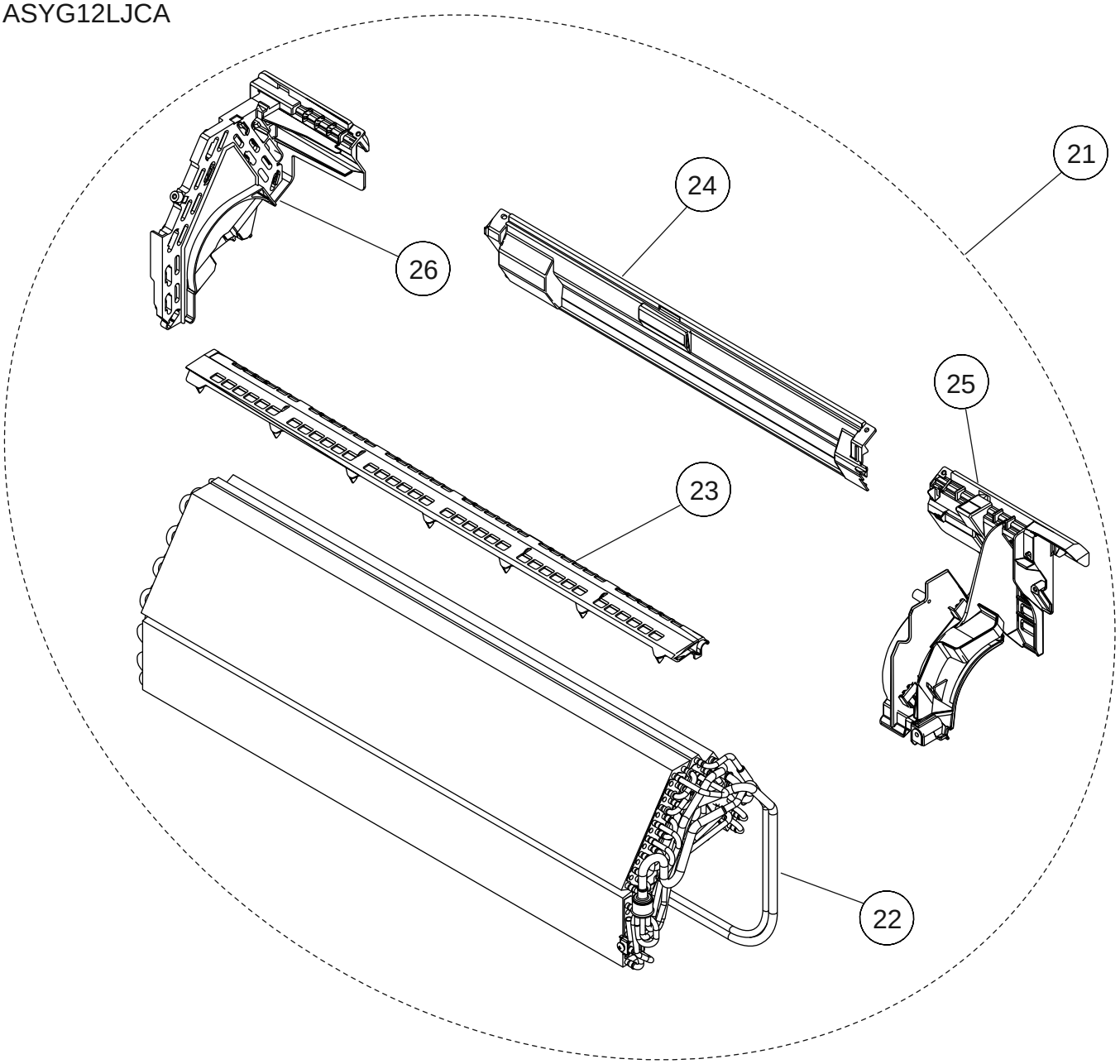

Ref	Description	Parts number	
21	Evaporator Total Assy	9317820011	
22	Joint Pipe Assy	9317838009	
23	Filter Guide	9317652001	
24	Rear Bracket	9317651004	
25	Evaporator Holder R	9317650007	
26	Evaporator Holder L	9317649001	
27	Holder (Room Thermistor)	9316895003	
28	Thermistor Assy	9900563004	

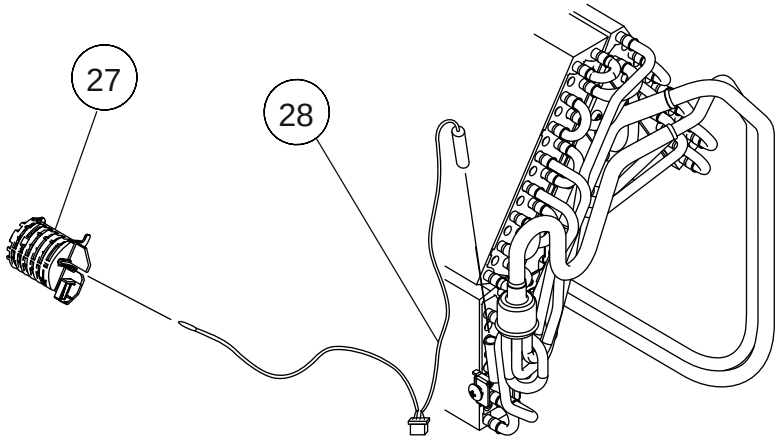

INDOOR UNIT
COMPACT WALL MOUNTED
ASYG07LJCA
ASYG09LJCA
ASYG12LJCA

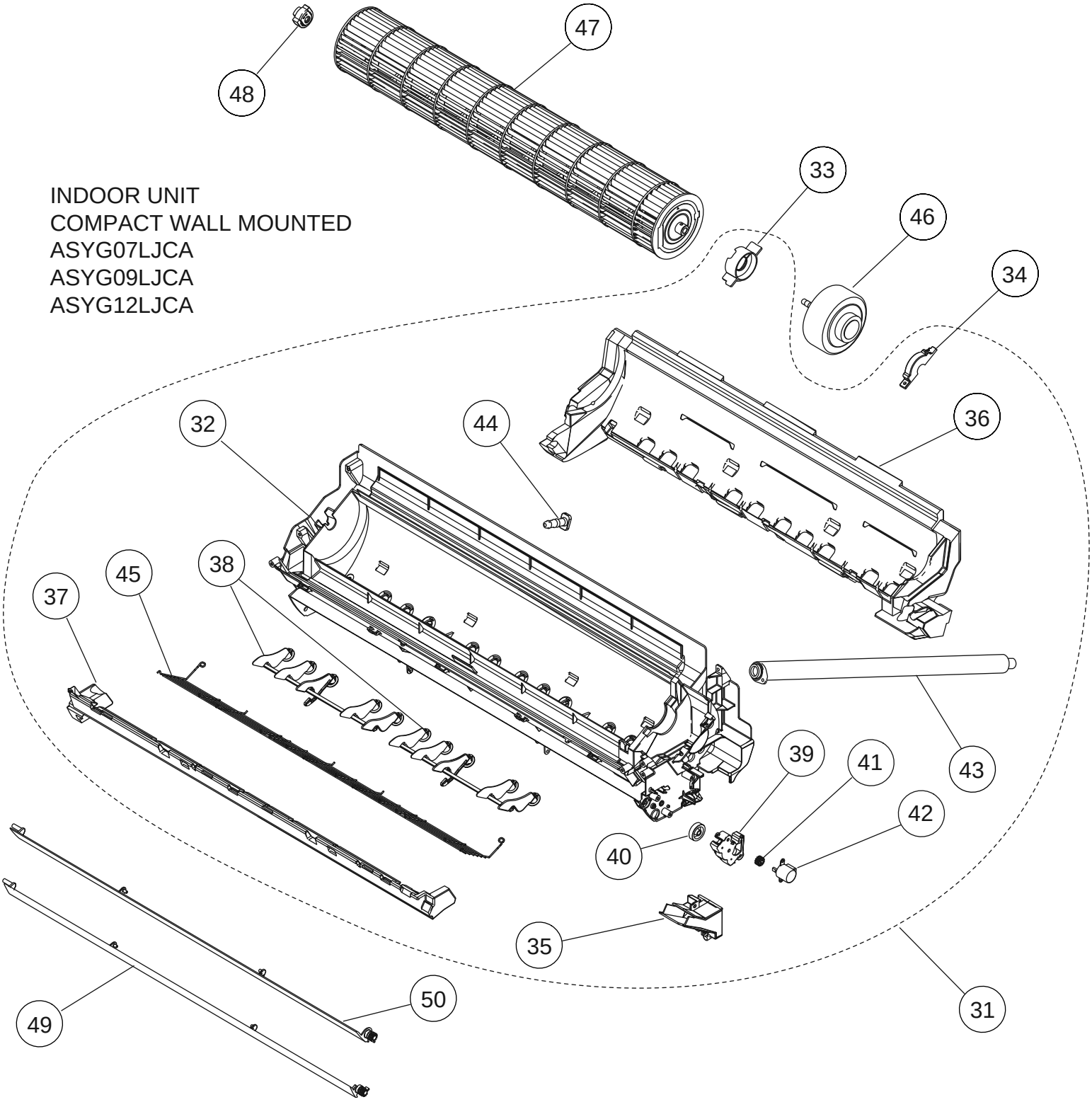

Ref	Description	Parts number	
31	Casing Assy	9318264050	
32	Casing	9317647014	
33	Motor Cover	9316568006	
34	Motor Cover	9316601000	
35	Cable Guide	9316567009	
36	Casing Cover B	9317653015	
37	Casing Cover F	9317654005	
38	R AND L Louver B	9316961012	
39	Louver Gear Holder	9317669016	
40	Louver Gear	9317648004	

Ref	Description	Parts number	
41	Gear A	9309994003	
42	Motor Step	9900384128	
43	Drain Hose Assy	9316904002	
44	Drain Cap	9316177017	
45	Fan Guard	9332277005	
46	Fan Motor	9602704002	
47	Crossflow Fan Assy	9316830004	
48	Bearing C Assy	9306628017	
49	Louver U	9317656016	
50	Louver Z	9317657006	

INDOOR UNIT
COMPACT WALL MOUNTED
ASYG07LJCA
ASYG09LJCA
ASYG12LJCA

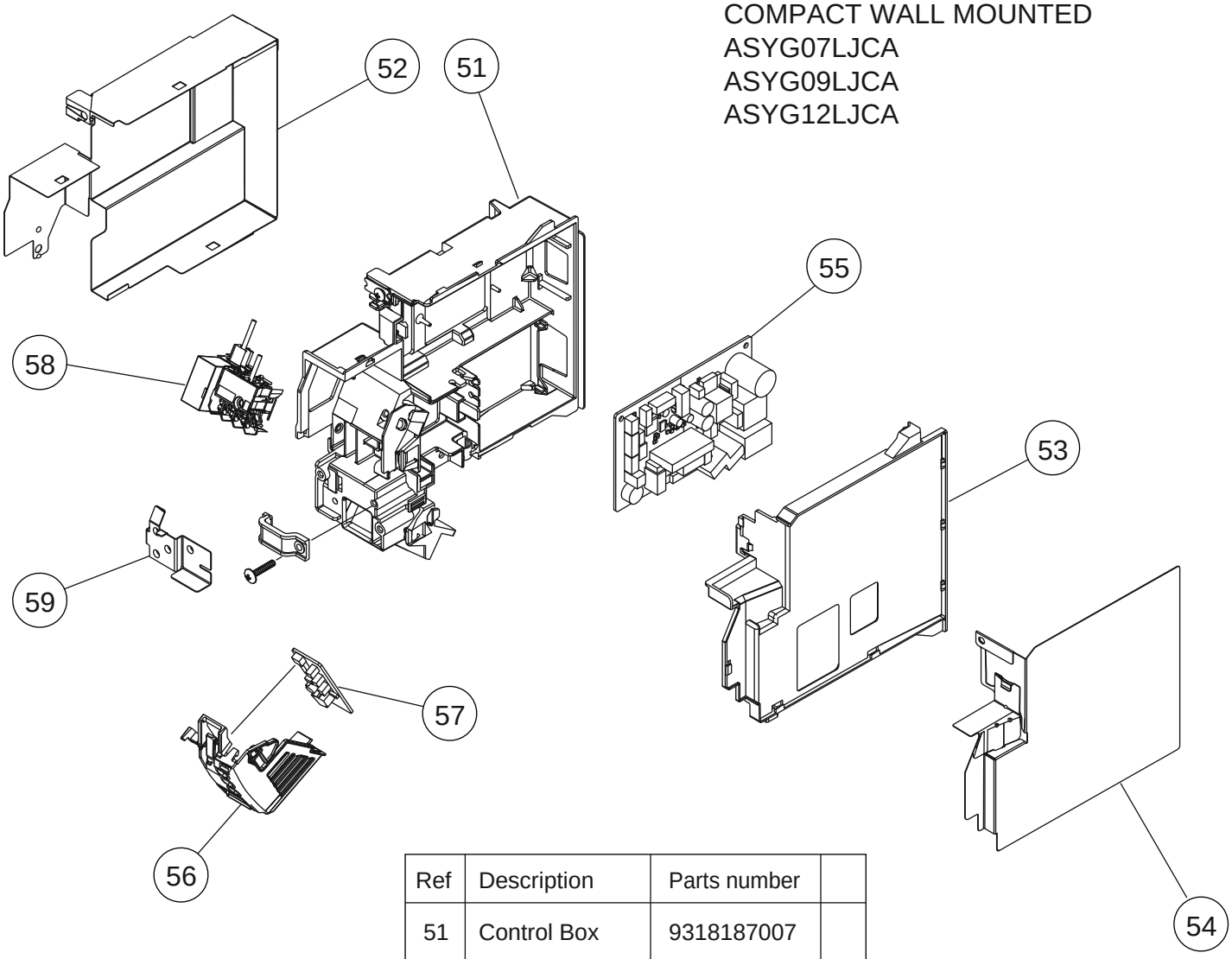

Ref	Description	Parts number	
51	Control Box	9318187007	
52	Box Shield	9317575010	
53	Control Cover	9317659017	
54	Cover Shield	9317923002	
55	Main PCB (07)	9708536378	
55	Main PCB (09)	9708536385	
55	Main PCB (12)	9708536392	
56	Display Case	9317662000	
57	Indicator PCB	9707649024	
58	Terminal	9900529017	
59	Earth Terminal	9316586000	

INDOOR UNIT
COMPACT WALL MOUNTED
ASYG07LUCA
ASYG09LUCA
ASYG12LUCA
ASYG14LUCA

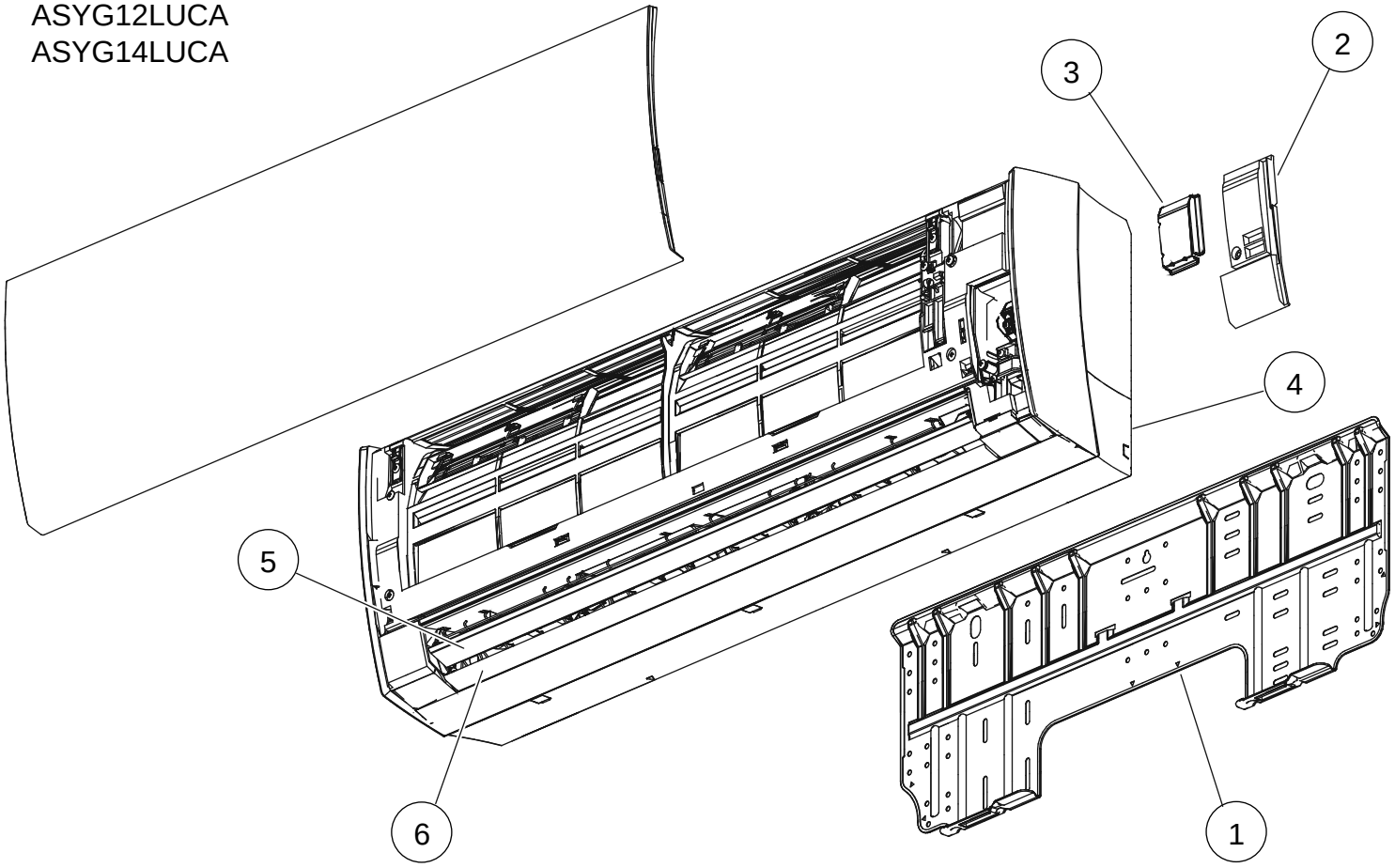

Ref.	Description	Part number	
1	Bracket Panel	9318913002	
2	Wire Cover	9318911008	
3	Wire Shield	9318919004	
4	Under Cover	9318879001	
5	Louver U	9318880007	
6	Louver Z	9318881004	
7	Remote Control	9319207018	
8	Remote Control Holder	9318912005	
--	Air Clean Filter Assy	9317250009	

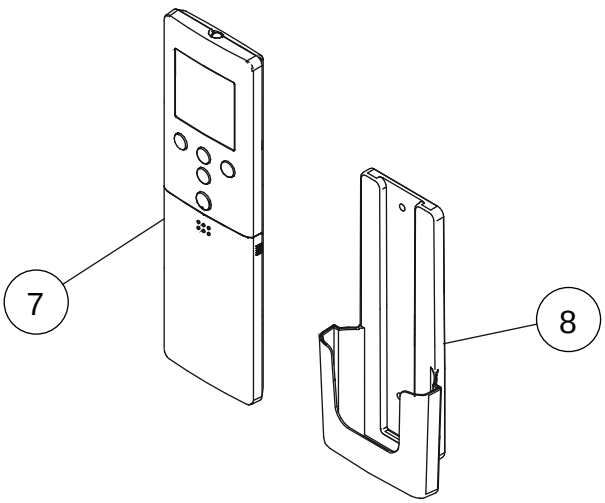

INDOOR UNIT
COMPACT WALL MOUNTED
ASYG07LUCA
ASYG09LUCA
ASYG12LUCA
ASYG14LUCA
Front panel

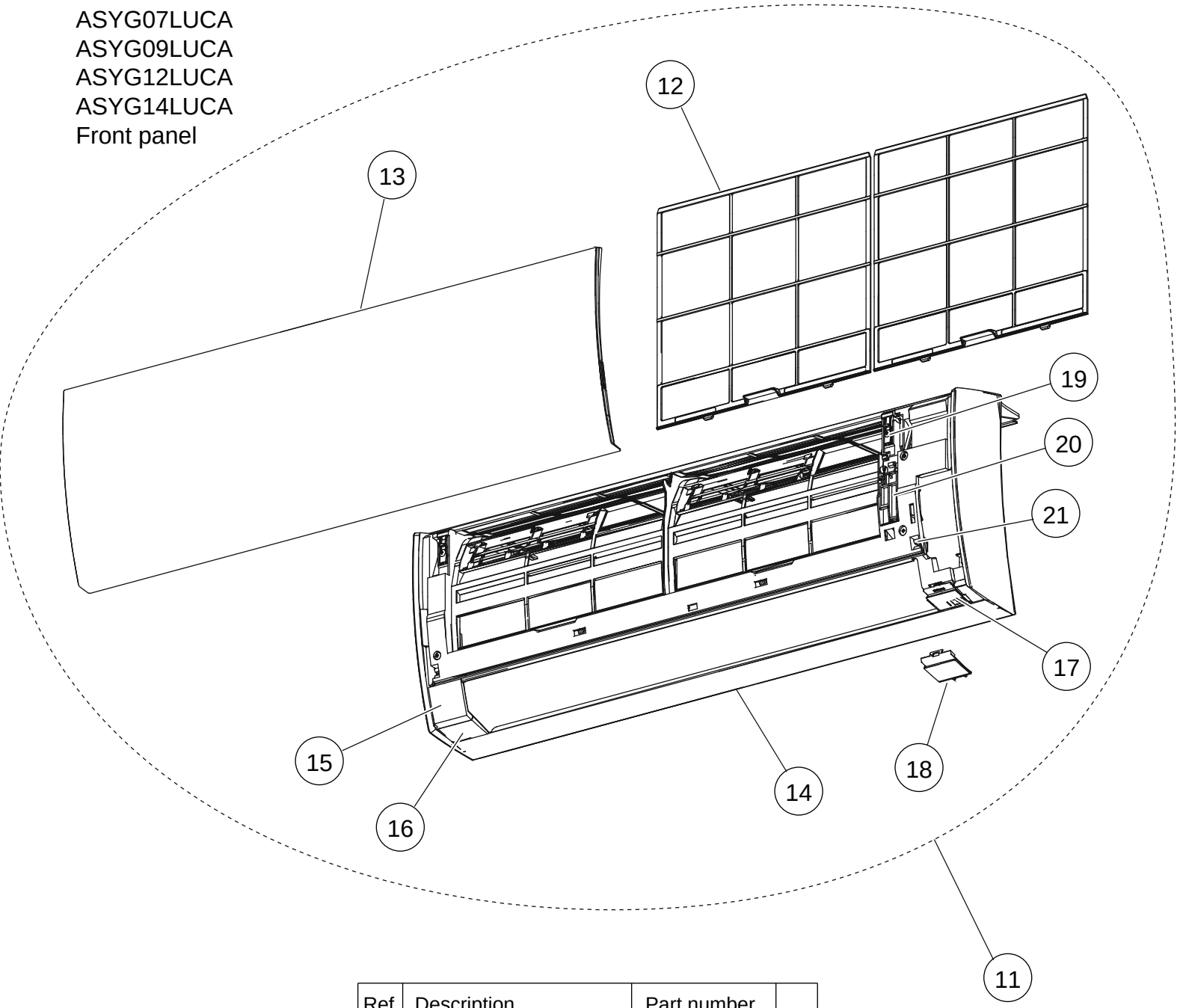

Ref.	Description	Part number	
11	Front Panel Total Assy	9319348001	
12	Air Filter	9318883008	
13	Intake Grille Assy	9319351001	
14	Front Panel	9318876000	
15	Front Panel Cover U	9318910001	
16	Display Plate Holder L	9318894004	
17	Display Plate Holder R	9318895001	
18	Display Plate R	9318893007	
19	Arm Cover	9318900002	
20	Grille Stay	9318899009	
21	Grille Clamper B	9316951006	

INDOOR UNIT
COMPACT WALL MOUNTED
ASYG07LUCA
ASYG09LUCA
ASYG12LUCA
ASYG14LUCA
Evaporator

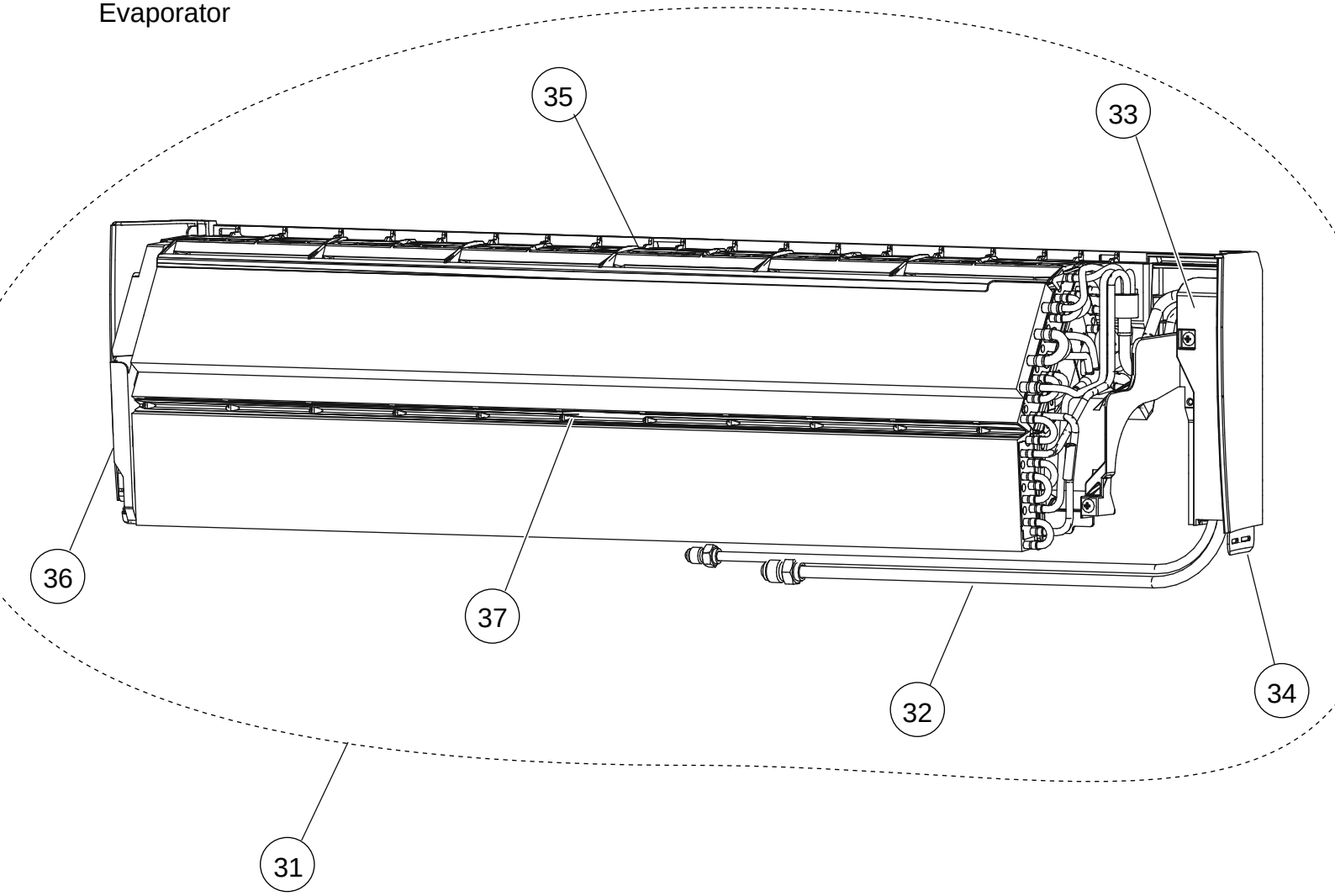

Ref.	Description	Part number	
31	Evaporator Total Assy (07,09,12)	9319327006	
31	Evaporator Total Assy (14)	9319327013	
32	Joint Pipe Assy (07, 09, 12)	9319322001	
32	Joint Pipe Assy (14)	9319322018	
33	Joint Pipe Holder	9318901009	
34	Base	9318874006	
35	Filter Guide	9318887006	
36	Evaporator Holder L	9318875003	
37	Air Seal	9319295008	

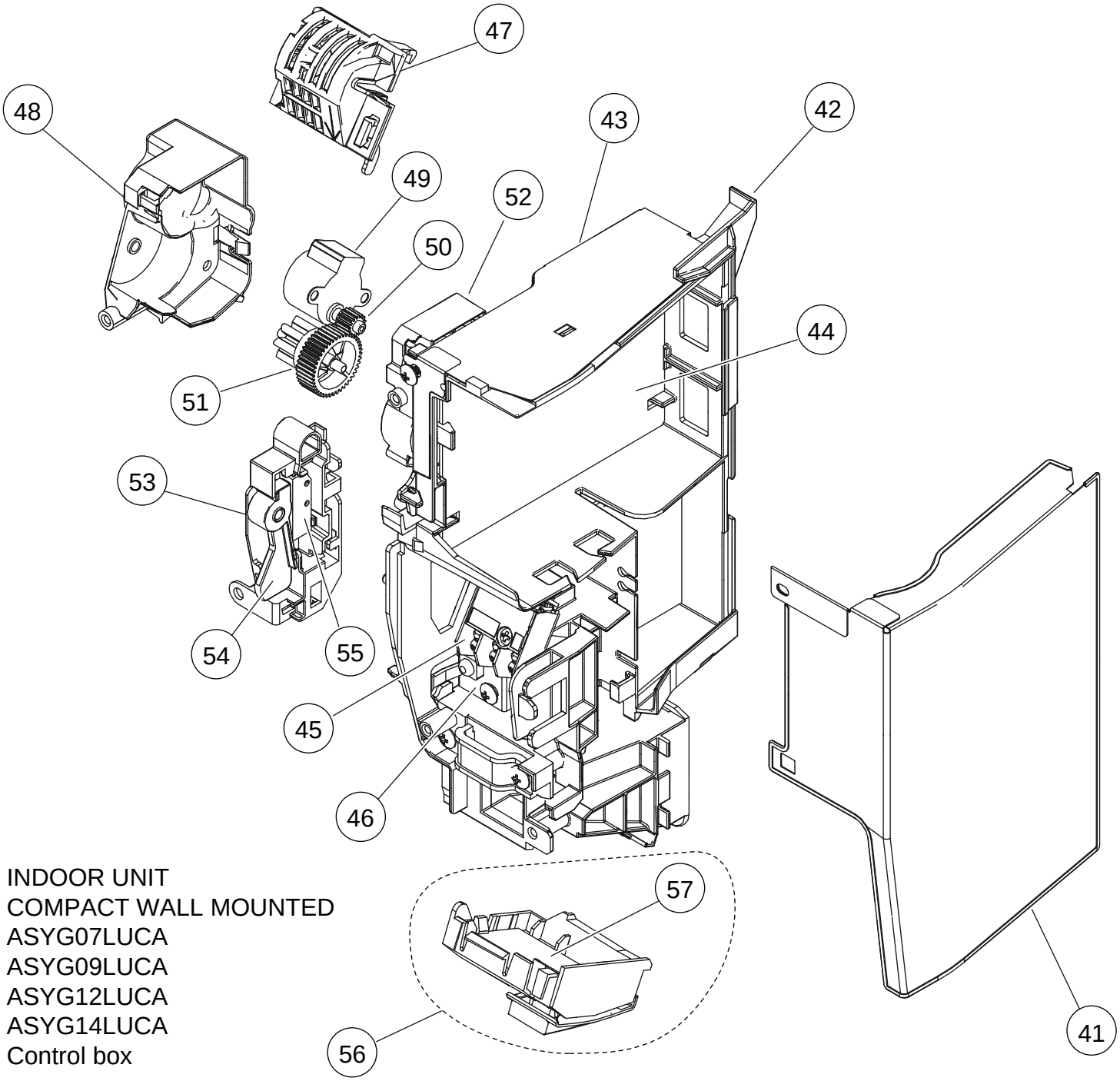

INDOOR UNIT
COMPACT WALL MOUNTED
ASYG07LUCA
ASYG09LUCA
ASYG12LUCA
ASYG14LUCA
Control box

Ref.	Description	Part number	
41	Cover Shield A	9318916003	
42	Control Box	9318882001	
43	Box Shield Assy	9319344003	
44	Main PCB (07)	9708713281	
44	Main PCB (09)	9708713298	
44	Main PCB (12)	9708713304	
44	Main PCB (14)	9708713311	
45	Terminal	9900638009	
46	Earth Terminal	9318918007	
47	Room Thermistor Holder	9319068008	
48	Gear Cover	9318902006	

Ref.	Description	Part number	
49	Step Motor	9900384166	
50	Gear B	9319294001	
51	Panel Gear	9319293004	
52	Gear Case	9318903003	
53	Switch Case	9319332000	
54	Grille Key Top	9319334004	
55	Micro Switch	9900625009	
56	Display Assy	9708823010	
57	Indicator PCB	9708824017	
--	Thermistor Assy	9900627003	

INDOOR UNIT
COMPACT WALL MOUNTED
ASYG07LUCA
ASYG09LUCA
ASYG12LUCA
ASYG14LUCA
Casing assy

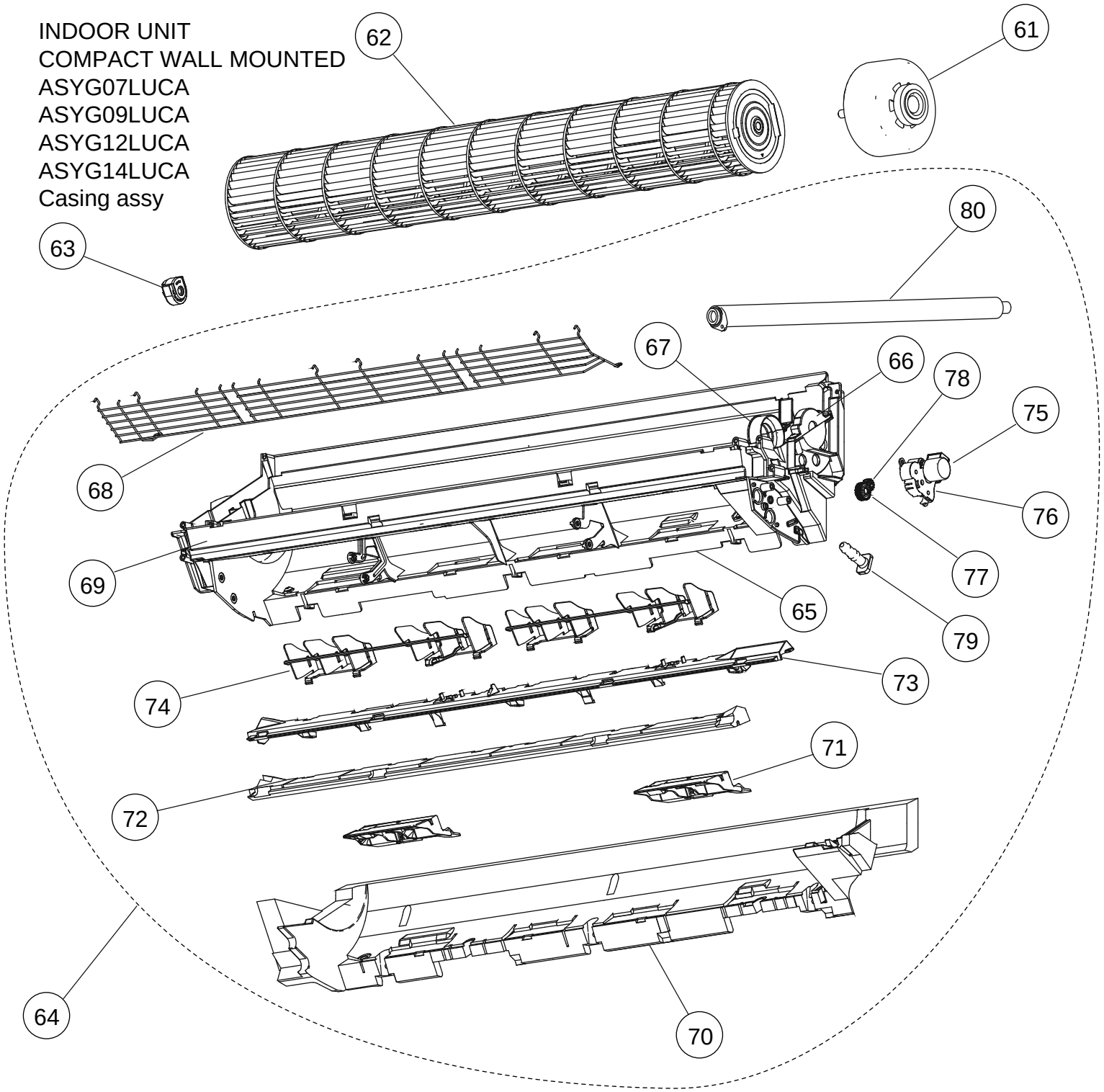

Ref.	Description	Part number	
61	Fan Motor	9602947003	
62	Crossflow Fan Assy	9319361000	
63	Bearing C Assy	9306628017	
64	Casing Assy	9319342009	
65	Casing	9318873009	
66	Motor Cover	9316601000	
67	Motor Cover	9318888003	
68	Fan Guard	9318924008	
69	Casing Cover F	9318923001	
70	Casing Cover B	9318920000	

Ref.	Description	Part number	
71	Pipe Bracket	9318889000	
72	Panel Cover	9319296005	
73	Louver Holder	9318886009	
74	R and L Louver	9318885002	
75	Motor Step	9900384128	
76	Louver Gear Holder	9318905007	
77	Louver Gear	9318904000	
78	Gear A	9309994003	
79	Drain Cap	9316177017	
80	Drain Hose Assy	9316904002	

INDOOR UNIT
COMPACT WALL MOUNTED
ASYG07LMCA
ASYG09LMCA
ASYG12LMCA
ASYG14LMCA

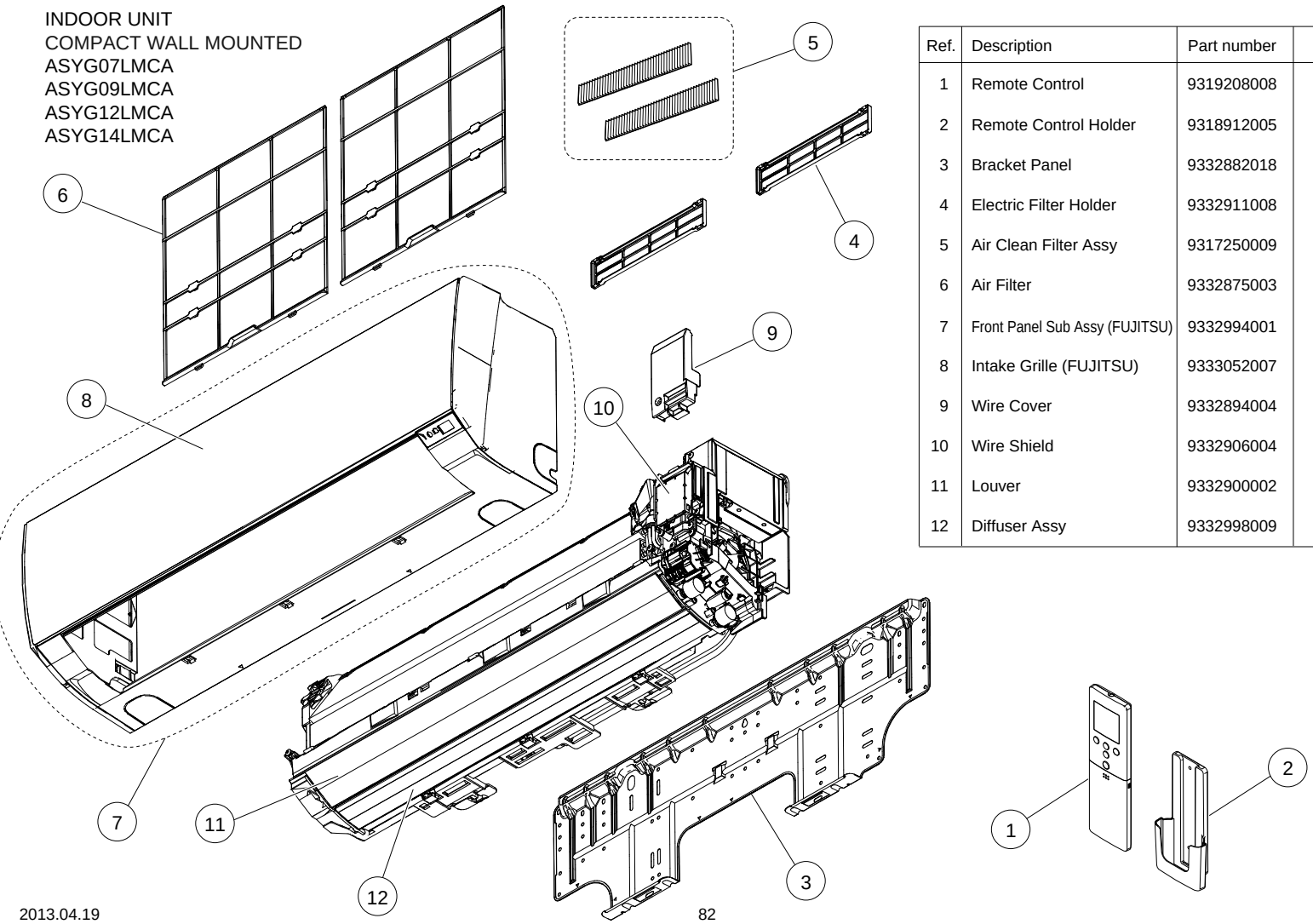

Ref.	Description	Part number	
1	Remote Control	9319208008	
2	Remote Control Holder	9318912005	
3	Bracket Panel	9332882018	
4	Electric Filter Holder	9332911008	
5	Air Clean Filter Assy	9317250009	
6	Air Filter	9332875003	
7	Front Panel Sub Assy (FUJITSU)	9332994001	
8	Intake Grille (FUJITSU)	9333052007	
9	Wire Cover	9332894004	
10	Wire Shield	9332906004	
11	Louver	9332900002	
12	Diffuser Assy	9332998009	

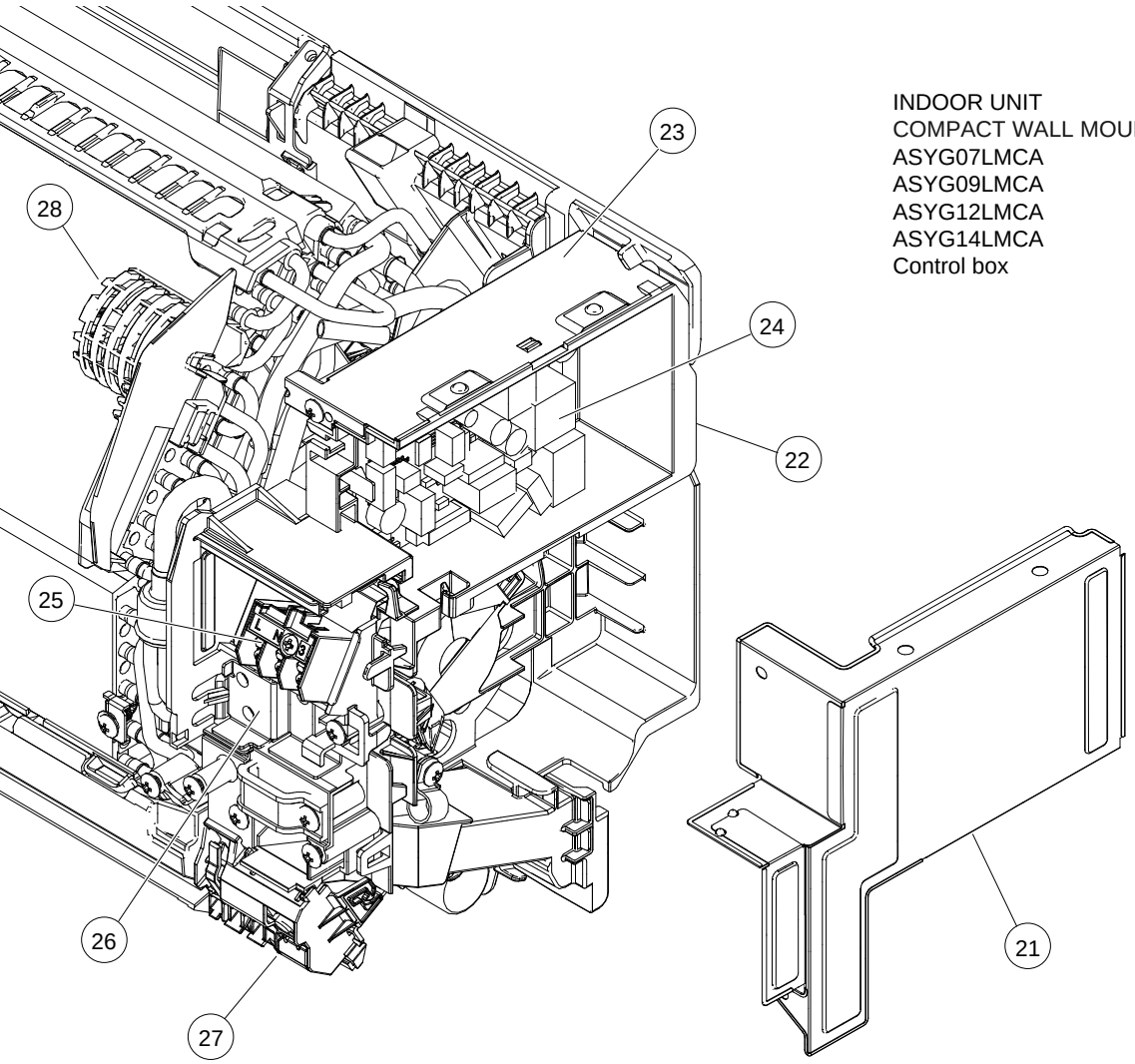

INDOOR UNIT
COMPACT WALL MOUNTED
ASYG07LMCA
ASYG09LMCA
ASYG12LMCA
ASYG14LMCA
Control box

Ref.	Description	Part number	
21	Cover Shield	9332915006	
22	Control Box	9332892000	
23	Box Shield Assy	9332877007	
24	Main PCB (07)	9709427033	
24	Main PCB (09)	9709427019	
24	Main PCB (12)	9709427026	
24	Main PCB (14)	9709427040	
25	Terminal	9900720001	
26	Earth Terminal	9332880007	
27	Display Assy	9709430019	
28	Room Thermistor Holder	9332868005	
--	Thermistor Assy	9900714024	

INDOOR UNIT
COMPACT WALL MOUNTED
ASYG07LMCA
ASYG09LMCA
ASYG12LMCA
ASYG14LMCA
Evaporator
Fan

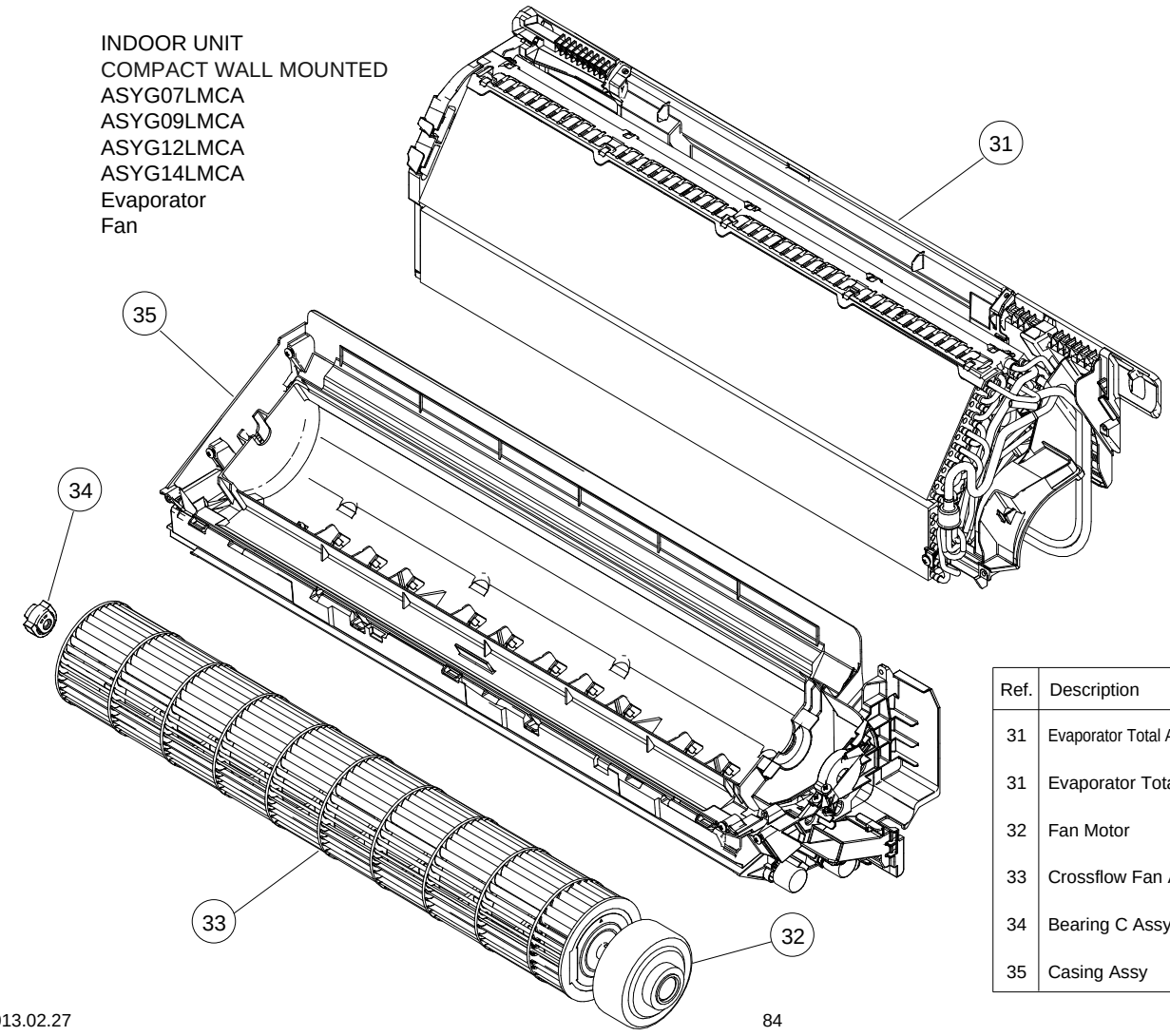

Ref.	Description	Part number	
31	Evaporator Total Assy (07, 09, 12)	9332989007	
31	Evaporator Total Assy (14)	9332989014	
32	Fan Motor	9603269005	
33	Crossflow Fan Assy	9316830004	
34	Bearing C Assy	9306628017	
35	Casing Assy	9333009001	

INDOOR UNIT
COMPACT WALL MOUNTED
ASYG07LMCA
ASYG09LMCA
ASYG12LMCA
ASYG14LMCA
Casing assy

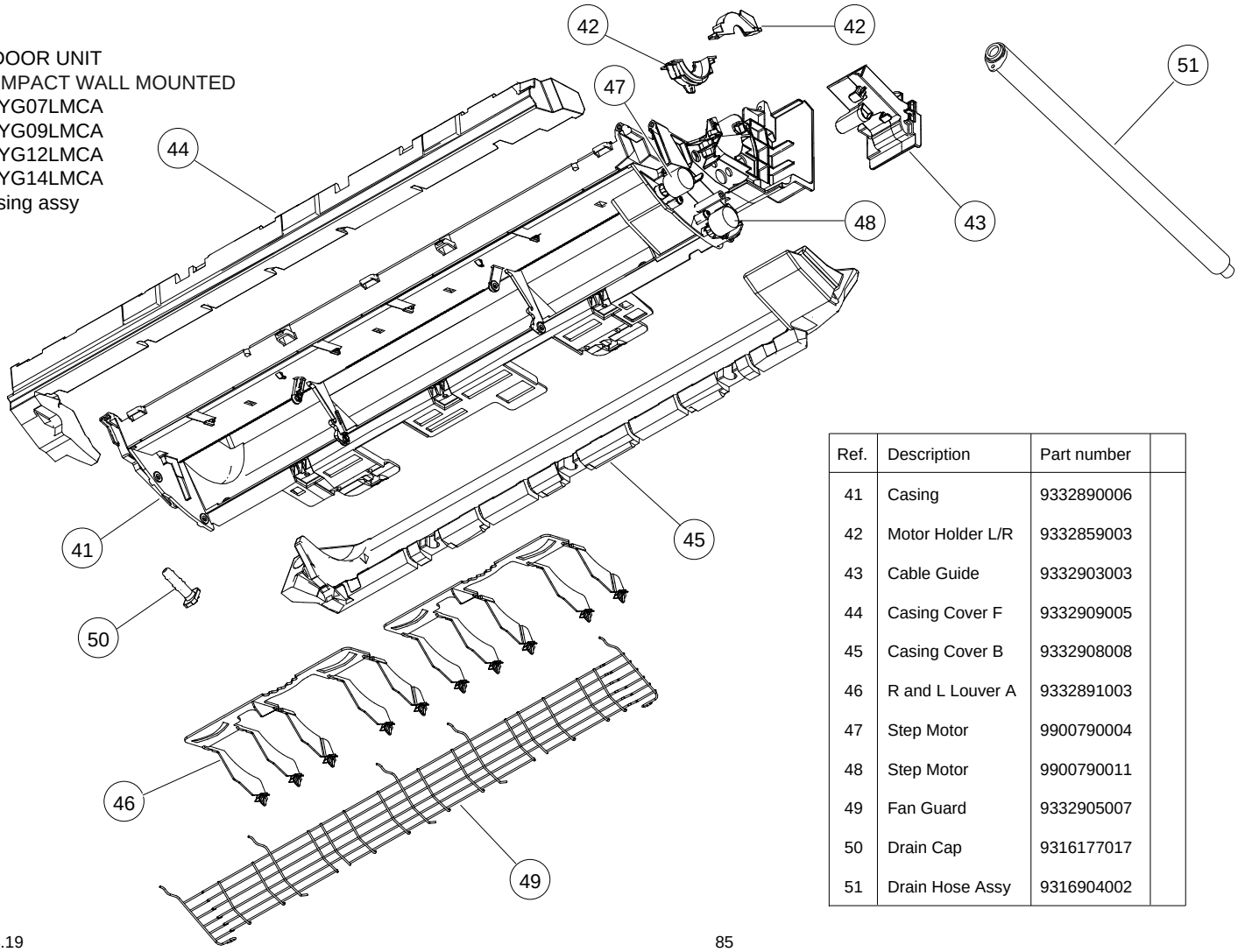

Ref.	Description	Part number	
41	Casing	9332890006	
42	Motor Holder L/R	9332859003	
43	Cable Guide	9332903003	
44	Casing Cover F	9332909005	
45	Casing Cover B	9332908008	
46	R and L Louver A	9332891003	
47	Step Motor	9900790004	
48	Step Motor	9900790011	
49	Fan Guard	9332905007	
50	Drain Cap	9316177017	
51	Drain Hose Assy	9316904002	

INDOOR UNIT
WALL MOUNTED
ASYG18LFCA
ASYG24LFCA
ASYG24LFCC

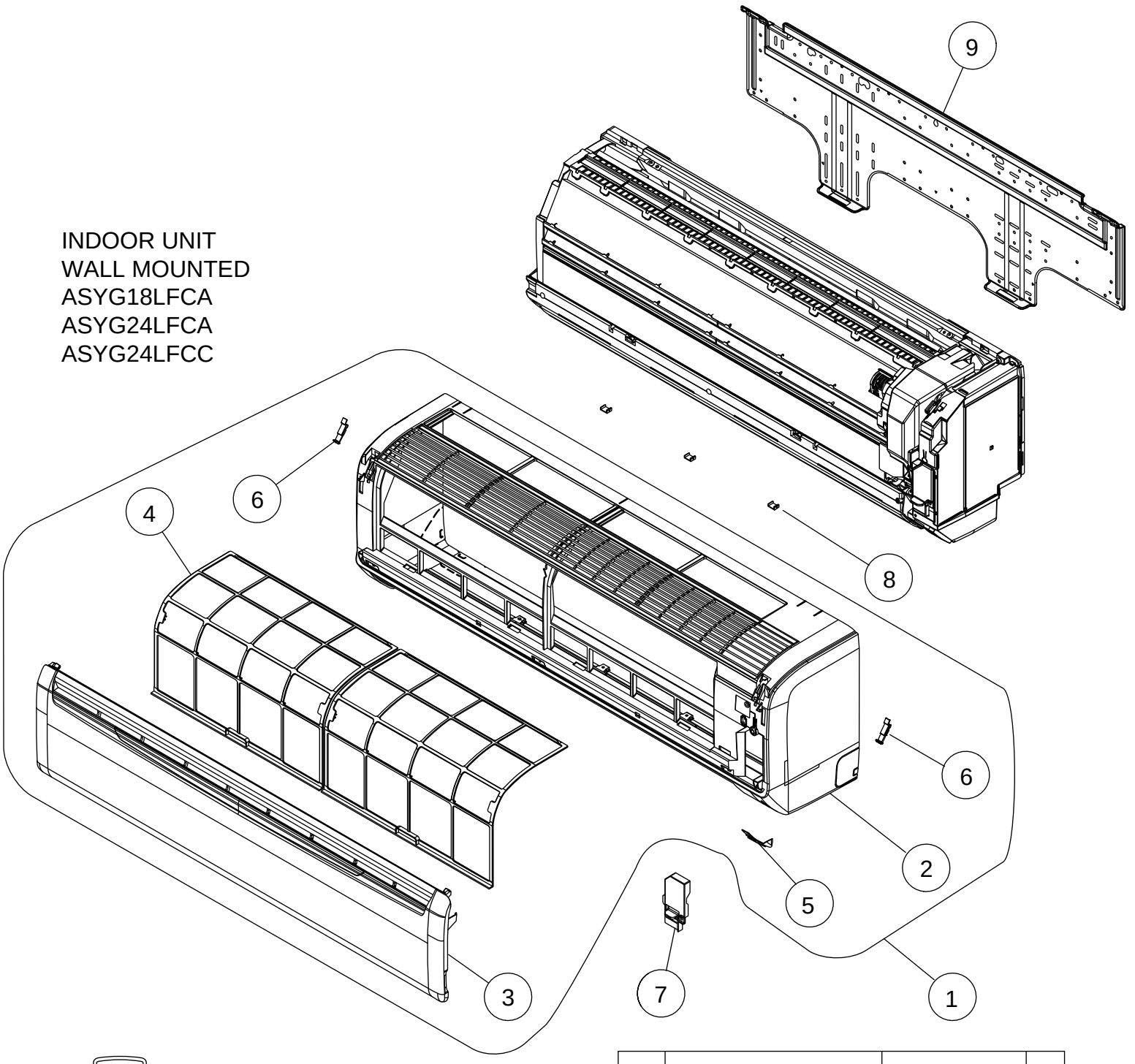

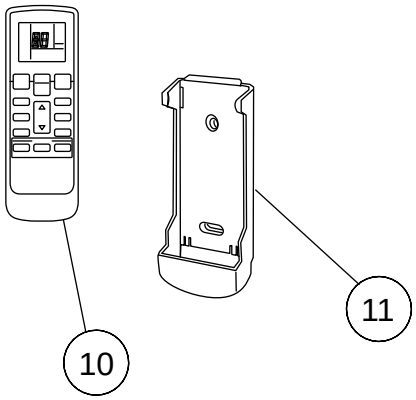

Ref	Description	Parts number	
1	Front Panel Total Assy	9318738001	
2	Front Panel	9314991080	
3	Intake Grille Assy	9385985049	
4	Air Filter	9315014016	
5	Receiver Window	9315010018	
6	Clamper Grille	9306755010	
7	Wire Clamper	9315015013	
8	Cap (Screw)	9309002050	
9	Bracket Panel	9315023018	
10	Remote Control	9379219037	
11	Remote Control Holder	9305642045	
--	Air Clean Filter Assy	9315212016	

INDOOR UNIT
WALL MOUNTED
ASYG18LFCA
ASYG24LFCA
ASYG24LFCC

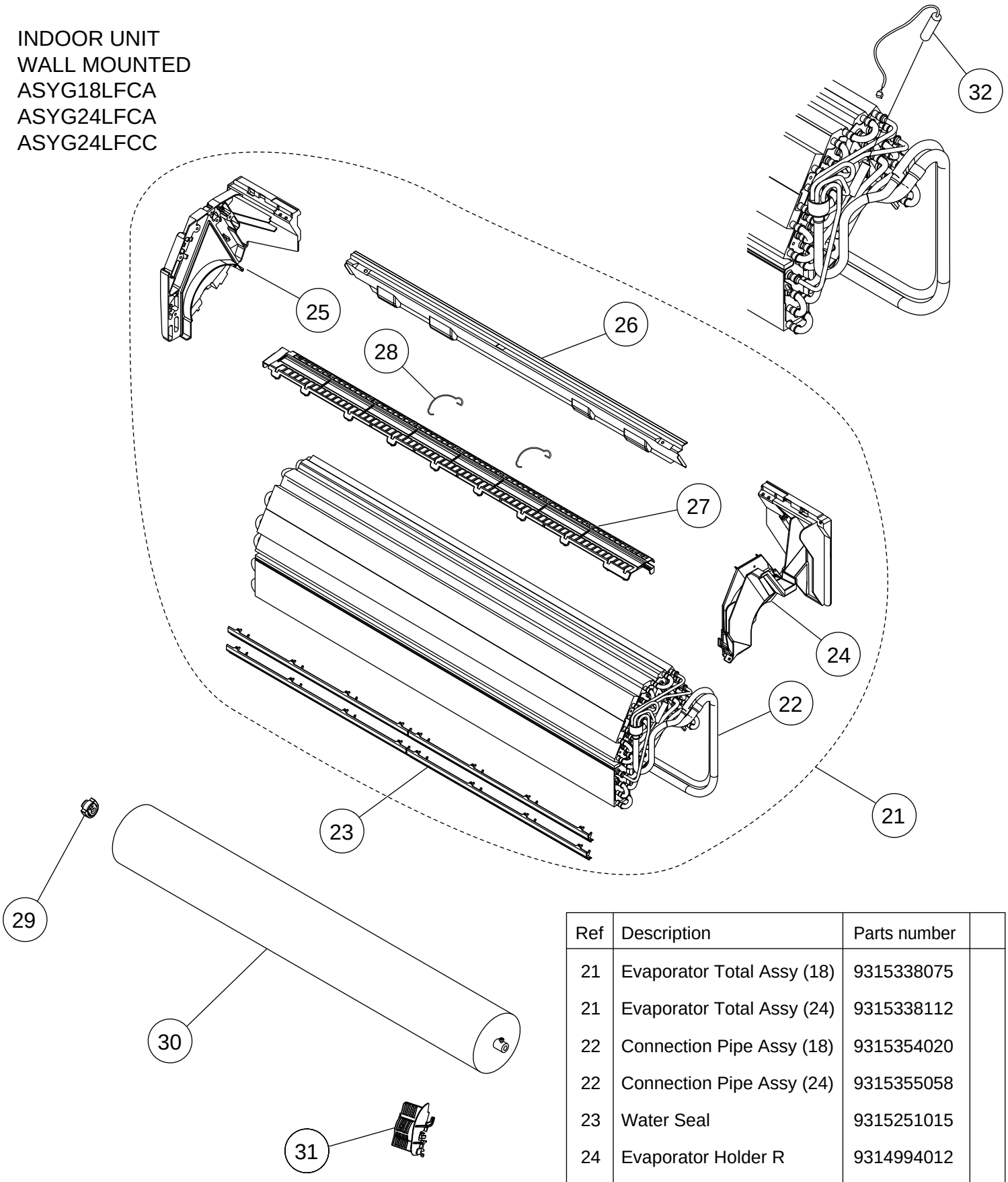

Ref	Description	Parts number	
21	Evaporator Total Assy (18)	9315338075	
21	Evaporator Total Assy (24)	9315338112	
22	Connection Pipe Assy (18)	9315354020	
22	Connection Pipe Assy (24)	9315355058	
23	Water Seal	9315251015	
24	Evaporator Holder R	9314994012	
25	Evaporator Holder L	9314995019	
26	Rear Bracket	9315022011	
27	Filter Guide	9315013019	
28	Filter Guard	9315411013	
29	Bearing C Assy	9306628017	
30	Crossflow Fan Assy	9315024015	
31	Holder (Room Thermistor)	9315252012	
32	Pipe Thermistor	9900551018	

INDOOR UNIT
WALL MOUNTED
ASYG18LFCA
ASYG24LFCA
ASYG24LFCC

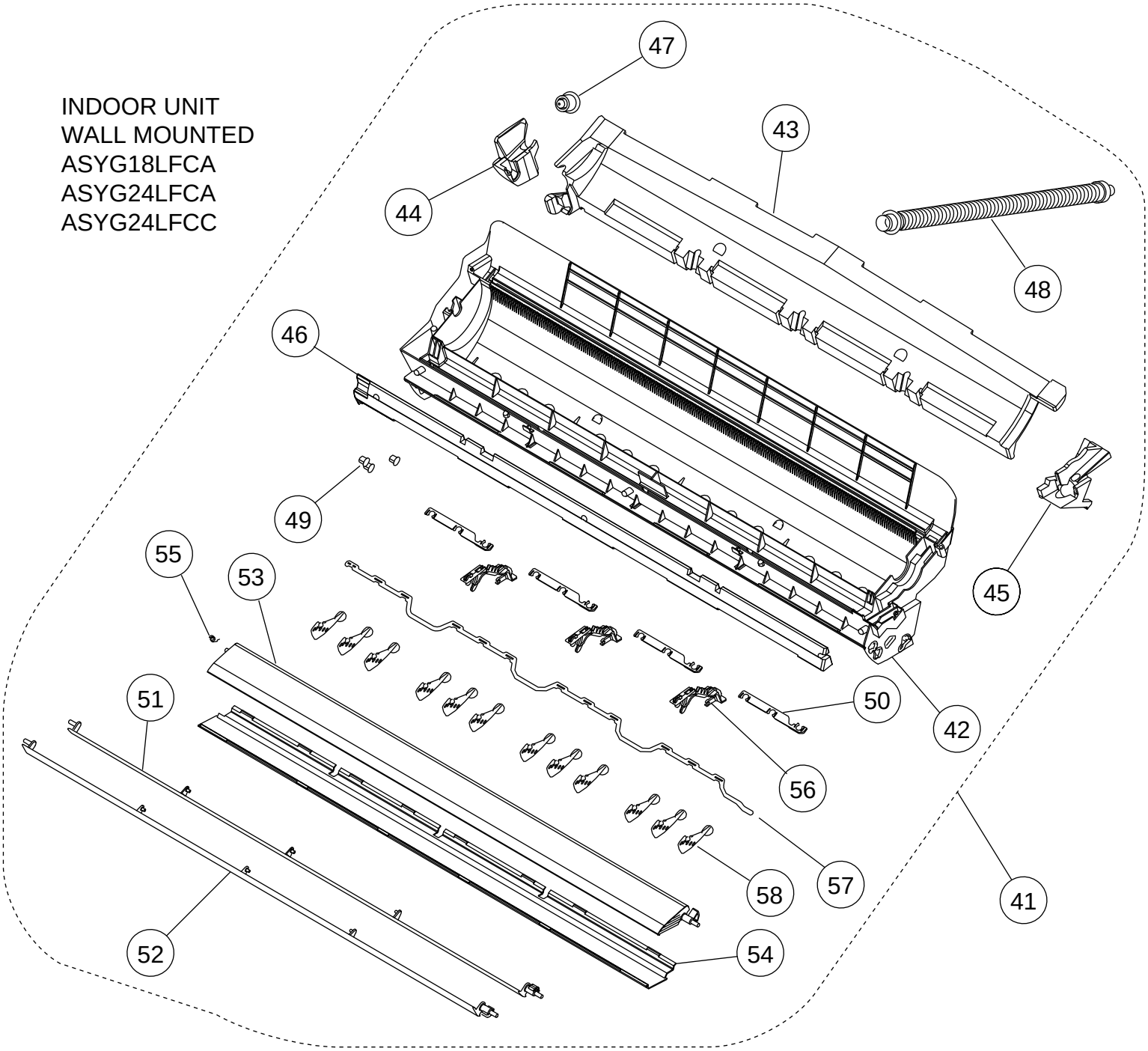

Ref	Description	Parts number	
41	Casing Assy (18)	9315331038	
41	Casing Assy (24)	9315331045	
42	Casing	9314993015	
43	Casing Cover B	9315016010	
44	Casing Cover L	9315017017	
45	Casing Cover R	9315018014	
46	Casing Cover F	9315019011	
47	Drain Cap	9367677009	
48	Drain Hose Assy	9315769015	
49	Bush B	9312156016	
50	Spacer B	9312441013	

Ref	Description	Parts number	
51	Louver U	9315000019	
52	Louver Z	9315001016	
53	Diffuser U	9315002013	
54	Diffuser Z	9315003010	
55	Spring C	9314142017	
56	Piller A	9315009012	
57	Joint B	9315006011	
58	R and L Louver	9311997016	
-	Fan Guard	9305751051	
-	Fan Guard Holder Right	9315814012	
-	Fan Guard Holder Left	9315815019	

INDOOR UNIT
WALL MOUNTED
ASYG18LFCA
ASYG24LFCA
ASYG24LFCC

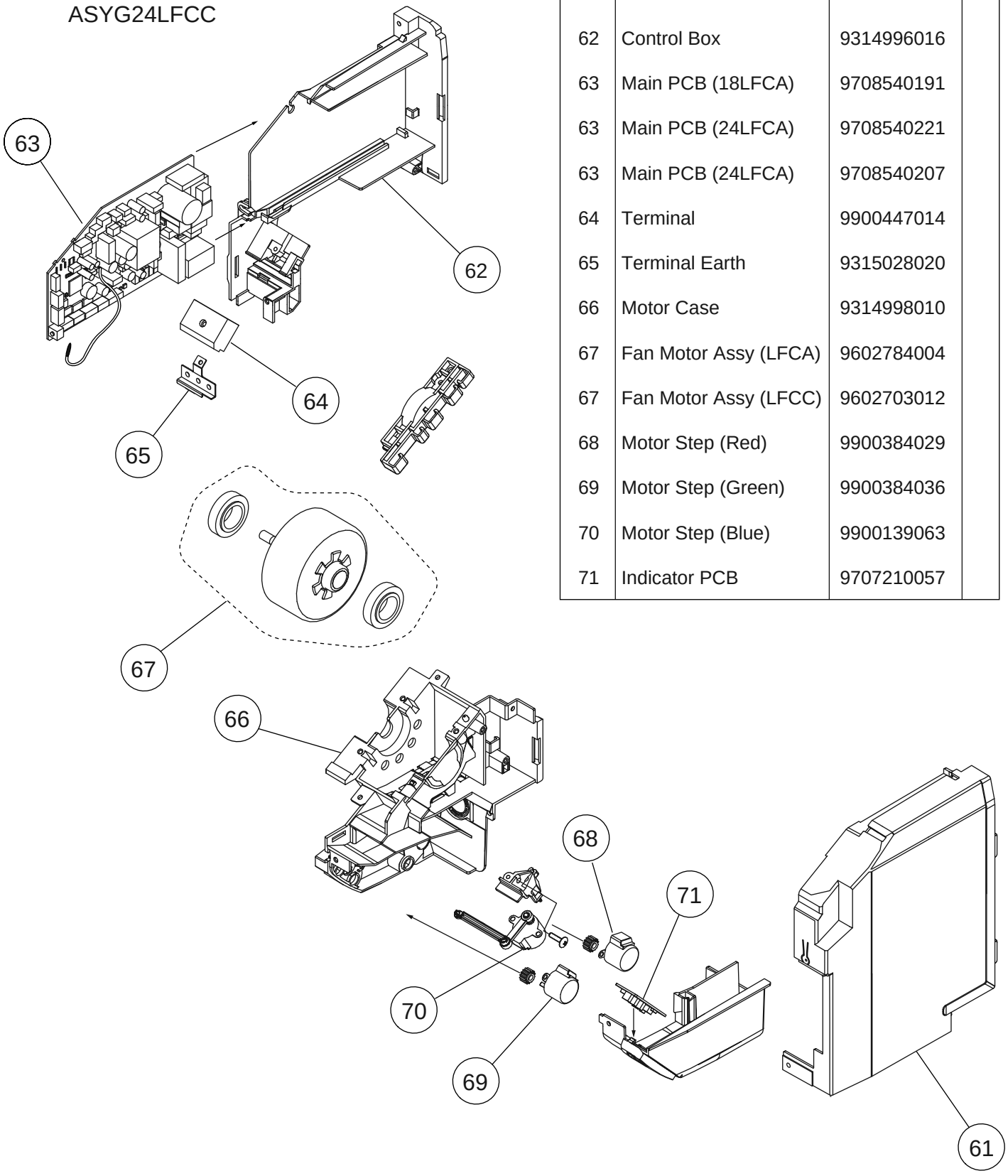

Ref	Description	Parts number	
61	Control Box Cover	9314997013	
62	Control Box	9314996016	
63	Main PCB (18LFCA)	9708540191	
63	Main PCB (24LFCA)	9708540221	
63	Main PCB (24LFCA)	9708540207	
64	Terminal	9900447014	
65	Terminal Earth	9315028020	
66	Motor Case	9314998010	
67	Fan Motor Assy (LFCA)	9602784004	
67	Fan Motor Assy (LFCC)	9602703012	
68	Motor Step (Red)	9900384029	
69	Motor Step (Green)	9900384036	
70	Motor Step (Blue)	9900139063	
71	Indicator PCB	9707210057	

DECORATION PANEL
UTG-UFYD-W

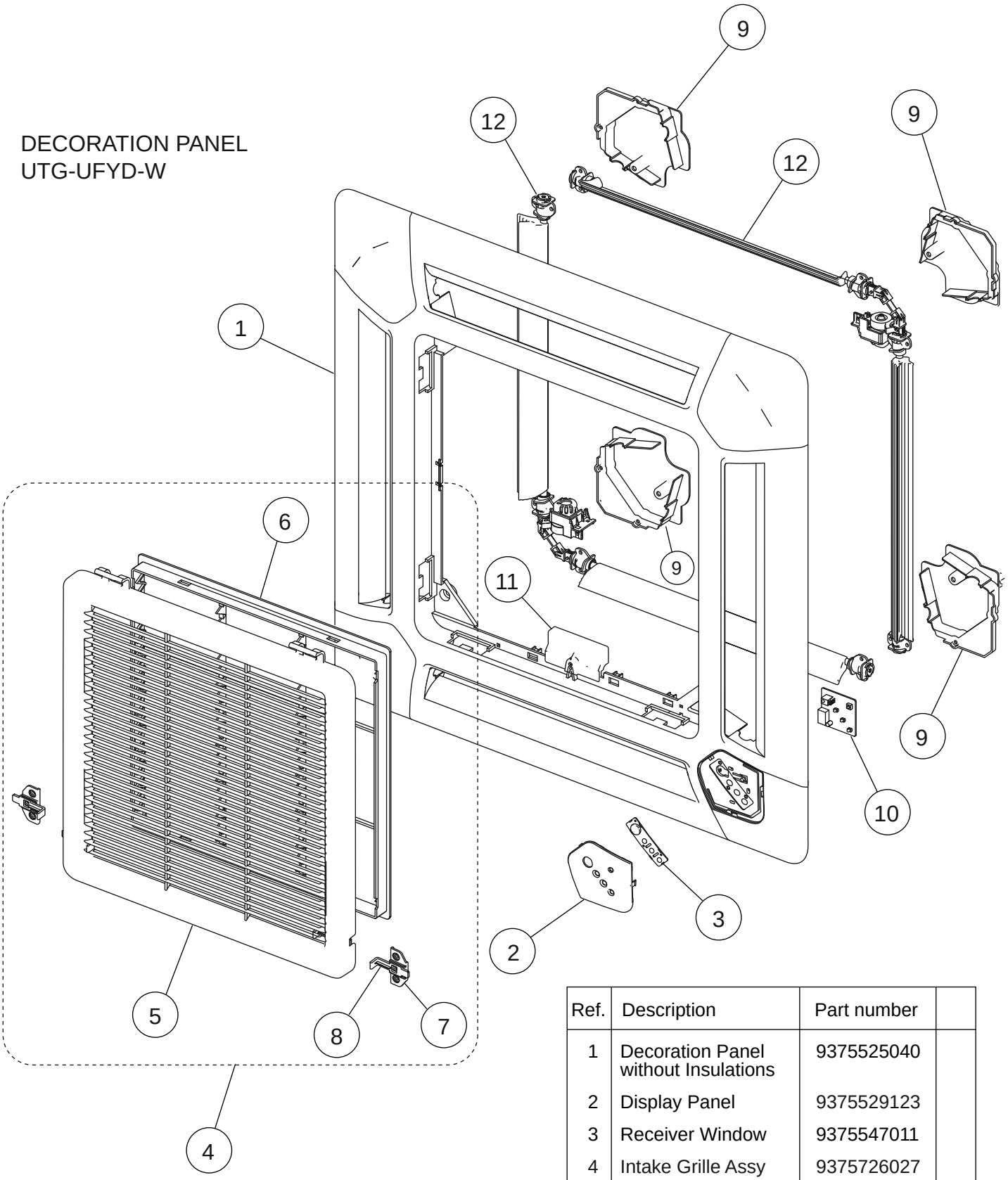

Ref.	Description	Part number	
1	Decoration Panel without Insulations	9375525040	
2	Display Panel	9375529123	
3	Receiver Window	9375547011	
4	Intake Grille Assy	9375726027	
5	Intake Grille	9375531027	
6	Long Life Filter	9375533014	
7	Hook Bracket	9375546014	
8	Grille Hook	9375532024	
9	Panel Cover without Insulations	9375530013	
10	Indicator PCB Assy	9707371031	
11	Connector Cover	9375549015	
12	Flap Total Assy	9377760029	

DECORATION PANEL
UTG-UFYD-W

Flap total assy
Motor holder assy

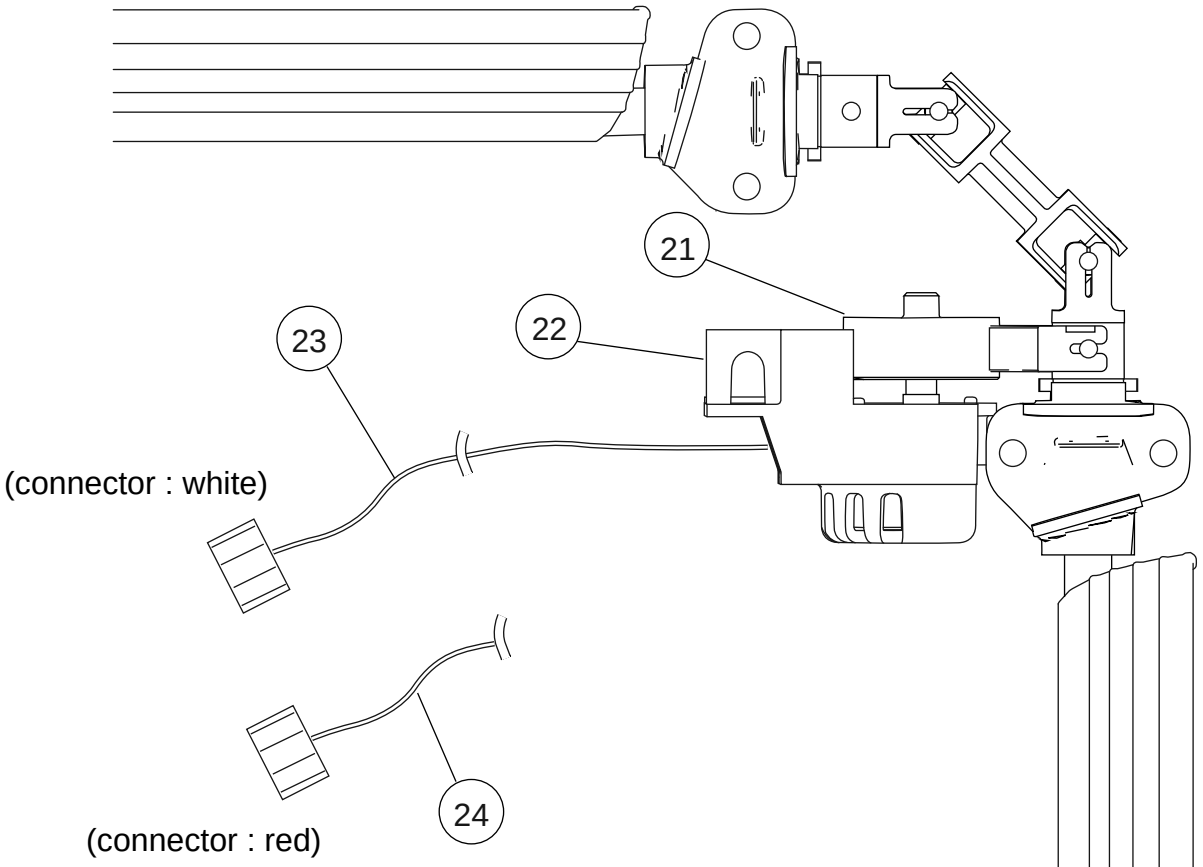

Ref.	Description	Part number	
21	Gear A	9375536015	
22	Motor Holder	9375535018	
23	Step Motor (white connector)	9900139070	
24	Step Motor (red connector)	9900139087	

INDOOR UNIT
COMPACT CASSETTE
AUYG07LVLA
AUYG09LVLA
AUYG12LVLA
AUYG14LVLA
AUYG18LVLA
AUYG12LVLB
AUYG14LVLB
AUYG18LVLB

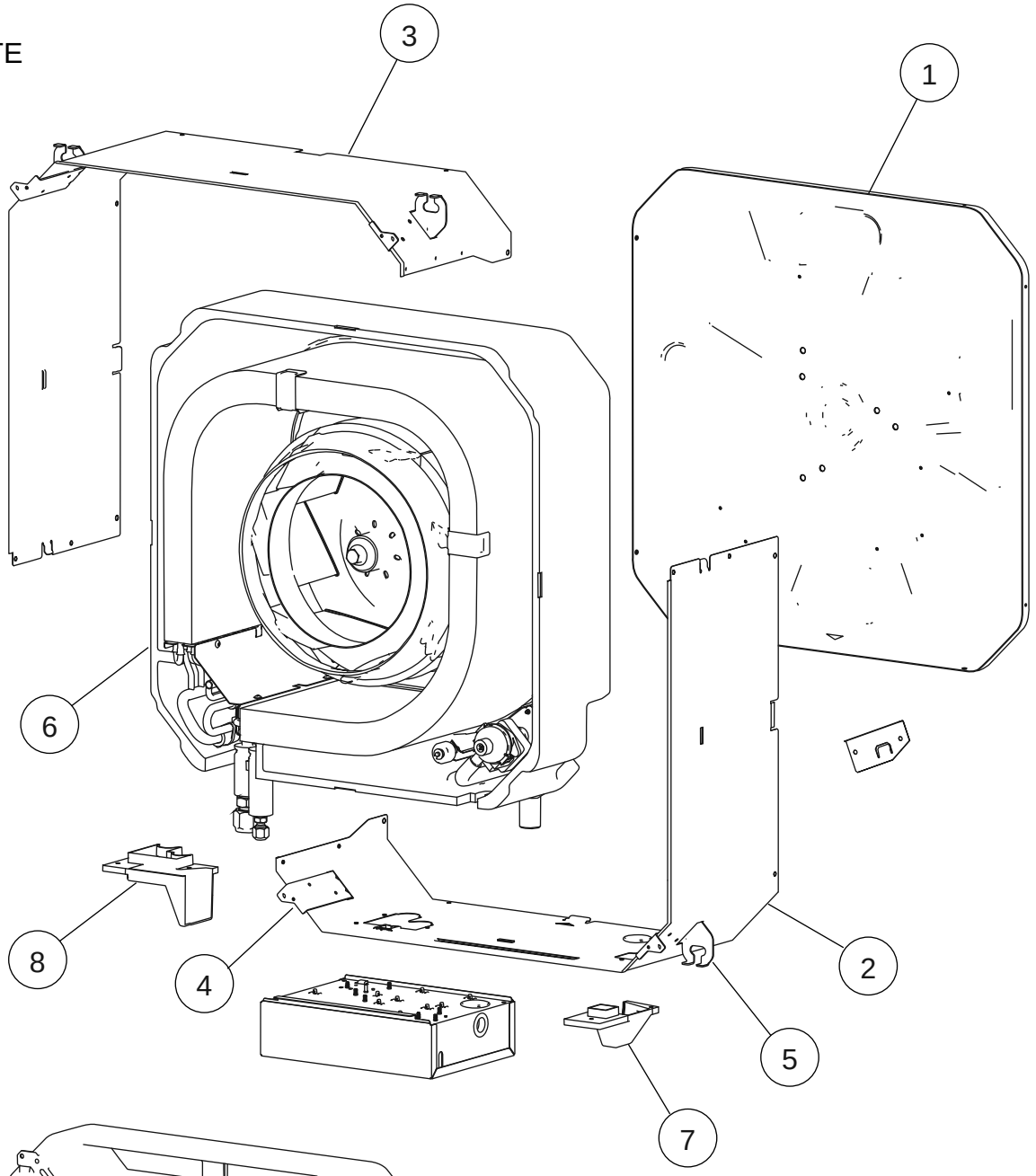

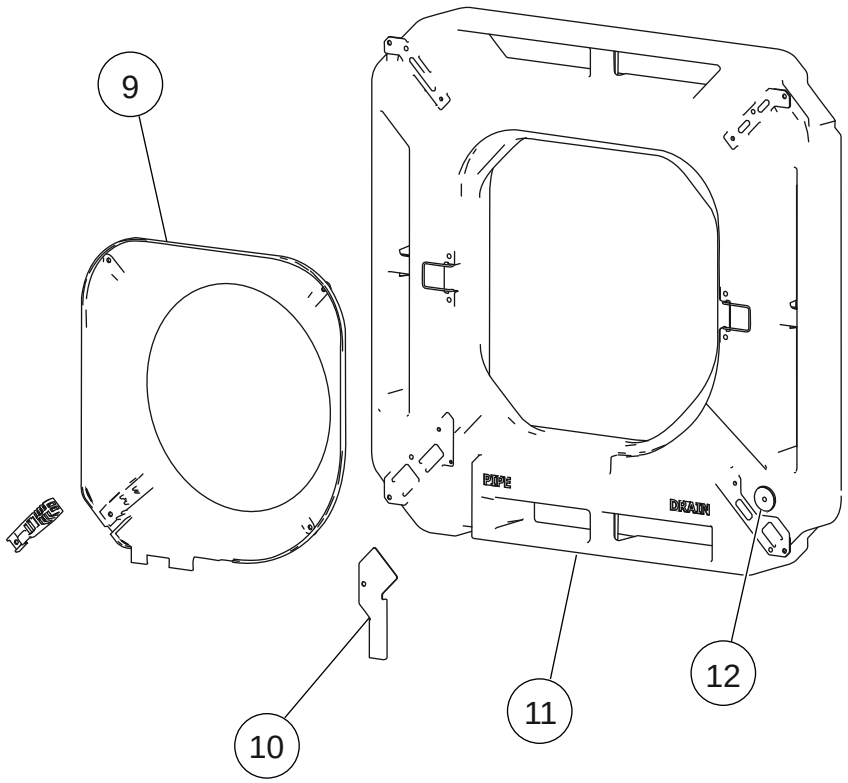

Ref.	Description	Part number	
1	Top Plate Assy	9375490010	
2	Cabinet A Assy	9375492014	
3	Cabinet B	9375494018	
4	Hook R	9375504014	
5	Hook L	9375505011	
6	Insulation Box Assy	9377764027	
7	Wire Cover	9375516017	
8	Pipe Cover	9375515010	
9	Bell Mouse	9375503017	
10	Wire Holder	9375478018	
11	Drain Pan Sub Assy	9377765024	
12	Drain Cap	9375502010	

INDOOR UNIT
COMPACT CASSETTE
AUYG07LVLA
AUYG09LVLA
AUYG12LVLA
AUYG14LVLA
AUYG18LVLA
AUYG12LVLB
AUYG14LVLB
AUYG18LVLB

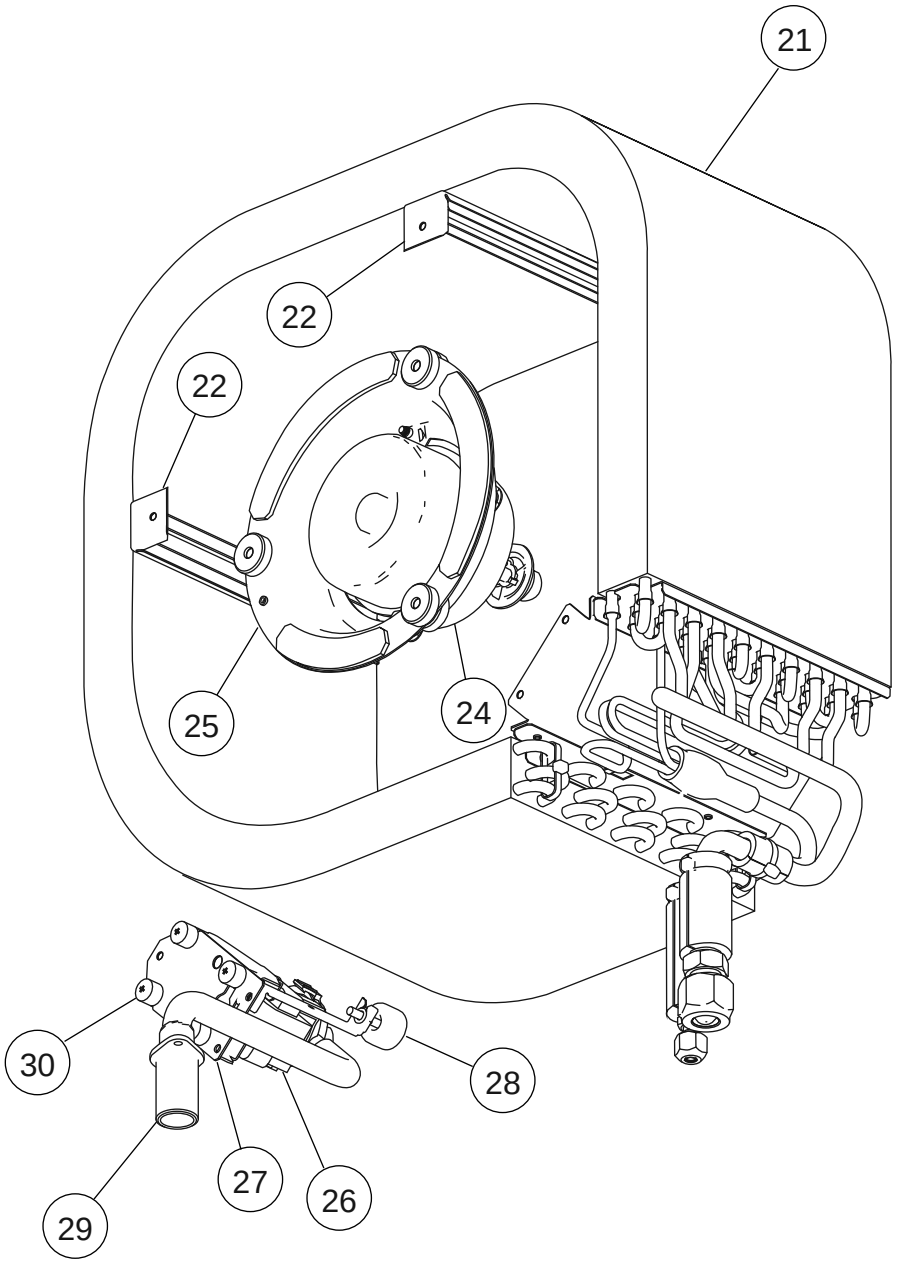

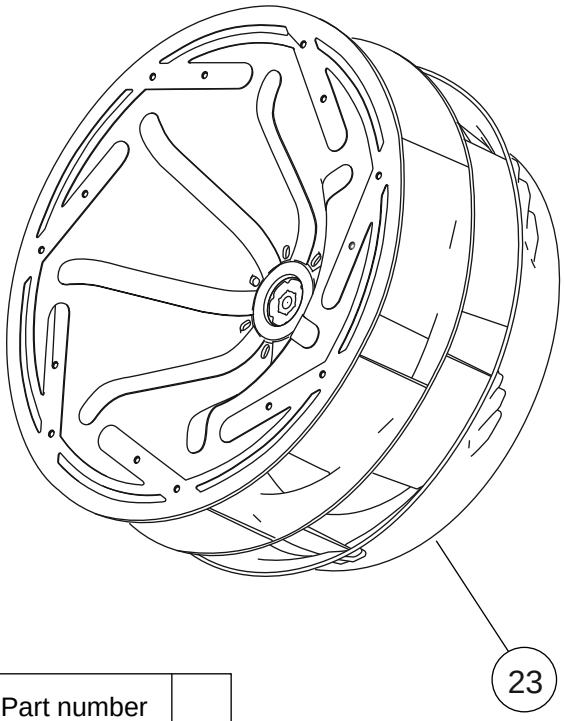

Ref.	Description	Part number	
21	Evaporator Total Assy (07)	9375720087	
21	Evaporator Total Assy (09, 12)	9375720032	
21	Evaporator Total Assy (14, 18)	9375720070	
22	Evaporator Holder	9375508012	
23	2 Stage Turbo Fan Assy	9375480011	
24	Fan Motor	9602436019	
25	Fan Motor Holder	9375552015	
26	Pump Assy	9900472030	
27	Drain Pump Holder B	9375518011	
28	Float Switch	9900361037	
29	Drain Port Sub Assy	9375718015	
30	Rubber (Pump)	9378426016	

INDOOR UNIT
COMPACT CASSETTE
AUYG07LVLA
AUYG09LVLA
AUYG12LVLA
AUYG14LVLA
AUYG18LVLA
AUYG12LVLB
AUYG14LVLB
AUYG18LVLB
Control unit

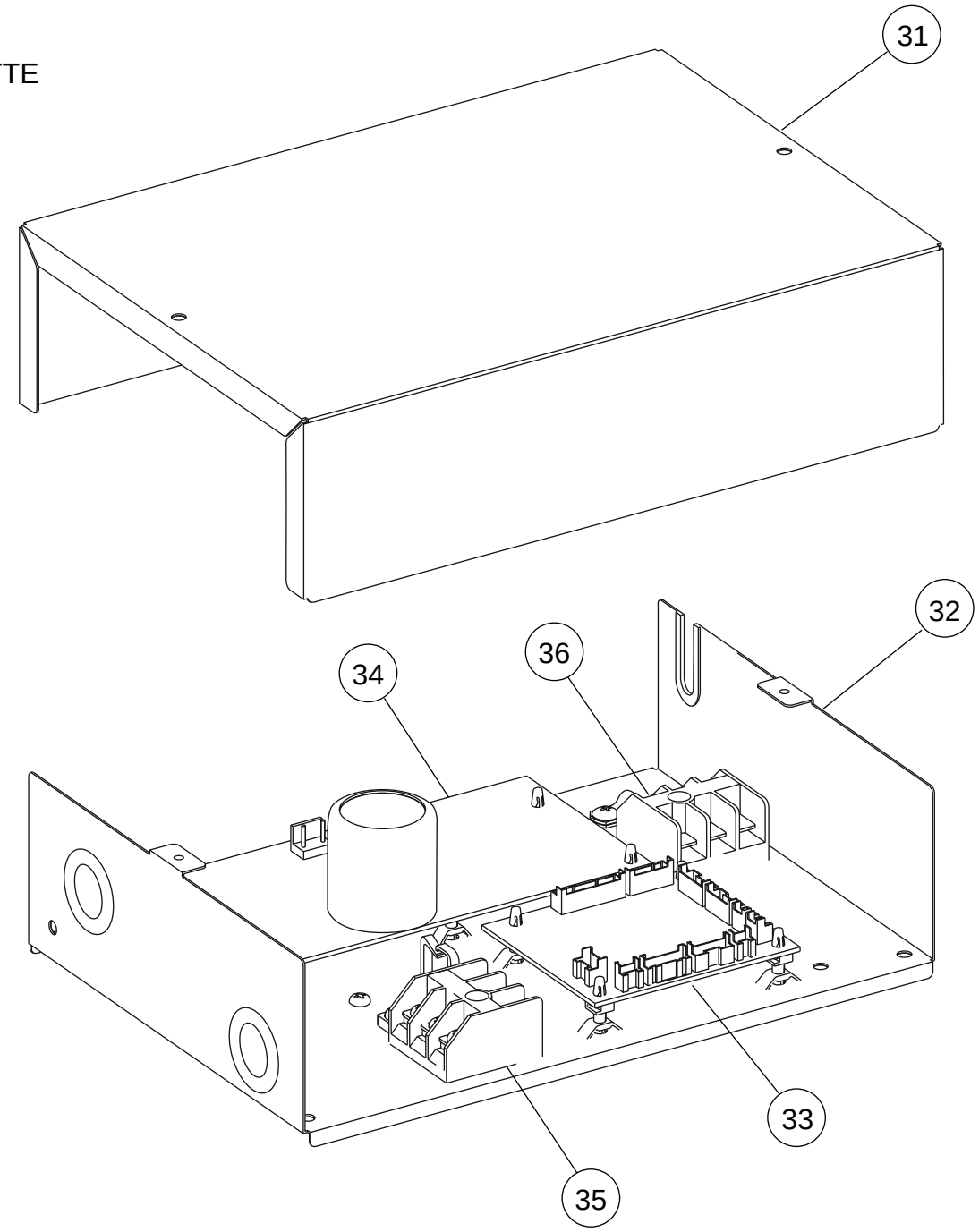

Ref.	Description	Part number	
31	Control Box Cover	9375512019	
32	Control Box A	9375511012	
33	Main PCB (07)	9707393736	
33	Main PCB (09)	9707393743	
33	Main PCB (12LVLA)	9707393750	
33	Main PCB (14LVLA)	9707393767	
33	Main PCB (18LVLA)	9707393774	
33	Main PCB (12LVLB)	9709245422	
33	Main PCB (14LVLB)	9709245439	
33	Main PCB (18LVLB)	9709245446	

Ref.	Description	Part number	
34	Power Supply PCB (LVLA)	9707398250	
34	Power Supply PCB (LVLB)	9707398380	
35	Terminal	9306489045	
36	Terminal	9703345012	
--	Pipe Thermistor	9703297014	
--	Room Thermistor	9900502003	
--	Remote Control	9379219006	
--	Remote Control Holder	9305642045	

INDOOR UNIT
FLOOR
AGYG09LVCA
AGYG12LVCA
AGYG14LVCA

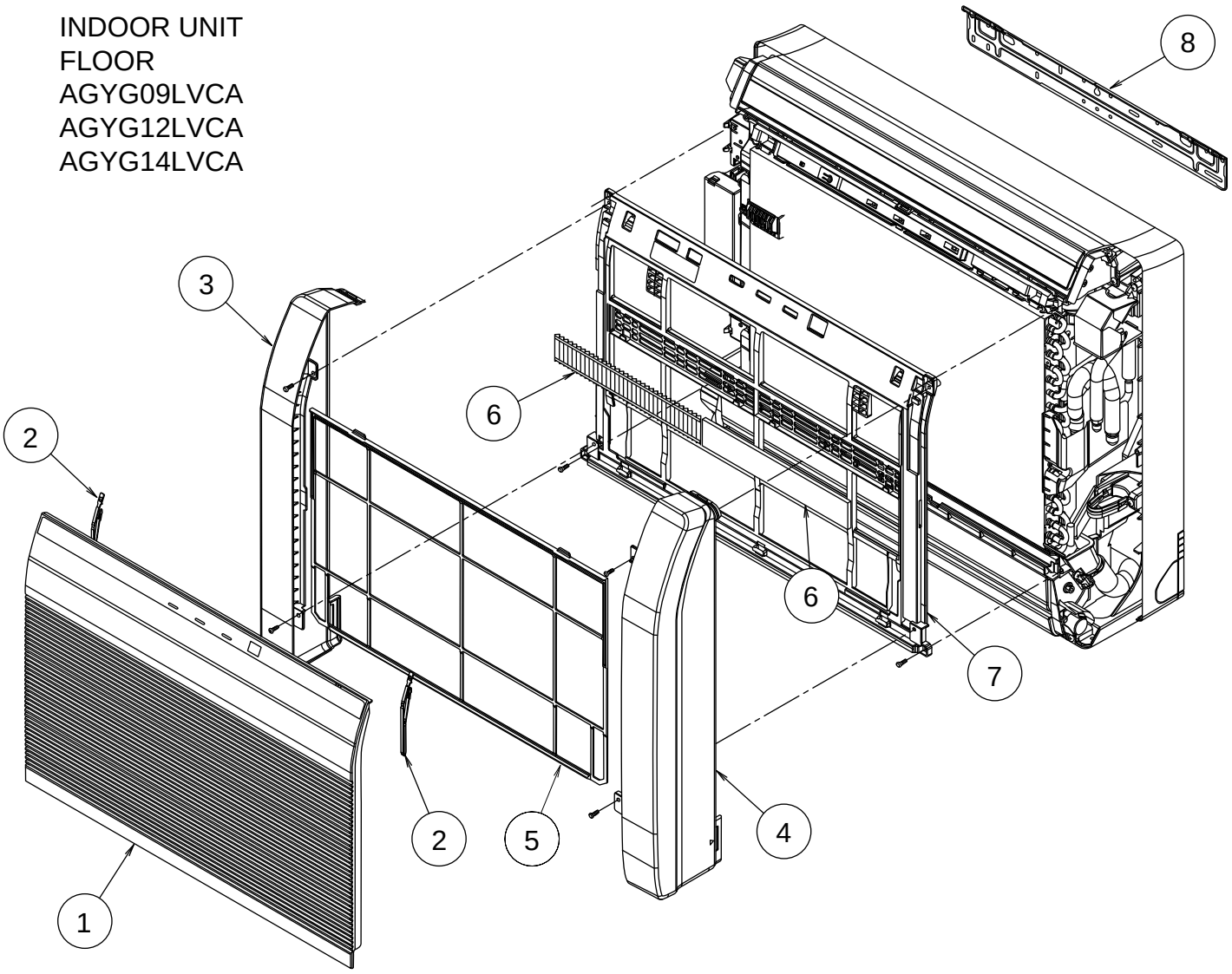

Ref	Description	Parts number	
1	Intake Grille Assy	9316418059	
2	Rope Assy	9316458017	
3	Panel (Front) L	9316187016	
4	Panel (Front) R	9316186019	
5	Air Filter	9316189010	
6	Air Clean Filter Assy	9316474017	
7	Panel (Front)	9316185012	
8	Bracket Panel	9316272019	
--	Remote Control	9379219006	
--	Remote Control Holder	9305642045	

INDOOR UNIT
FLOOR
AGYG09LVCA
AGYG12LVCA
AGYG14LVCA

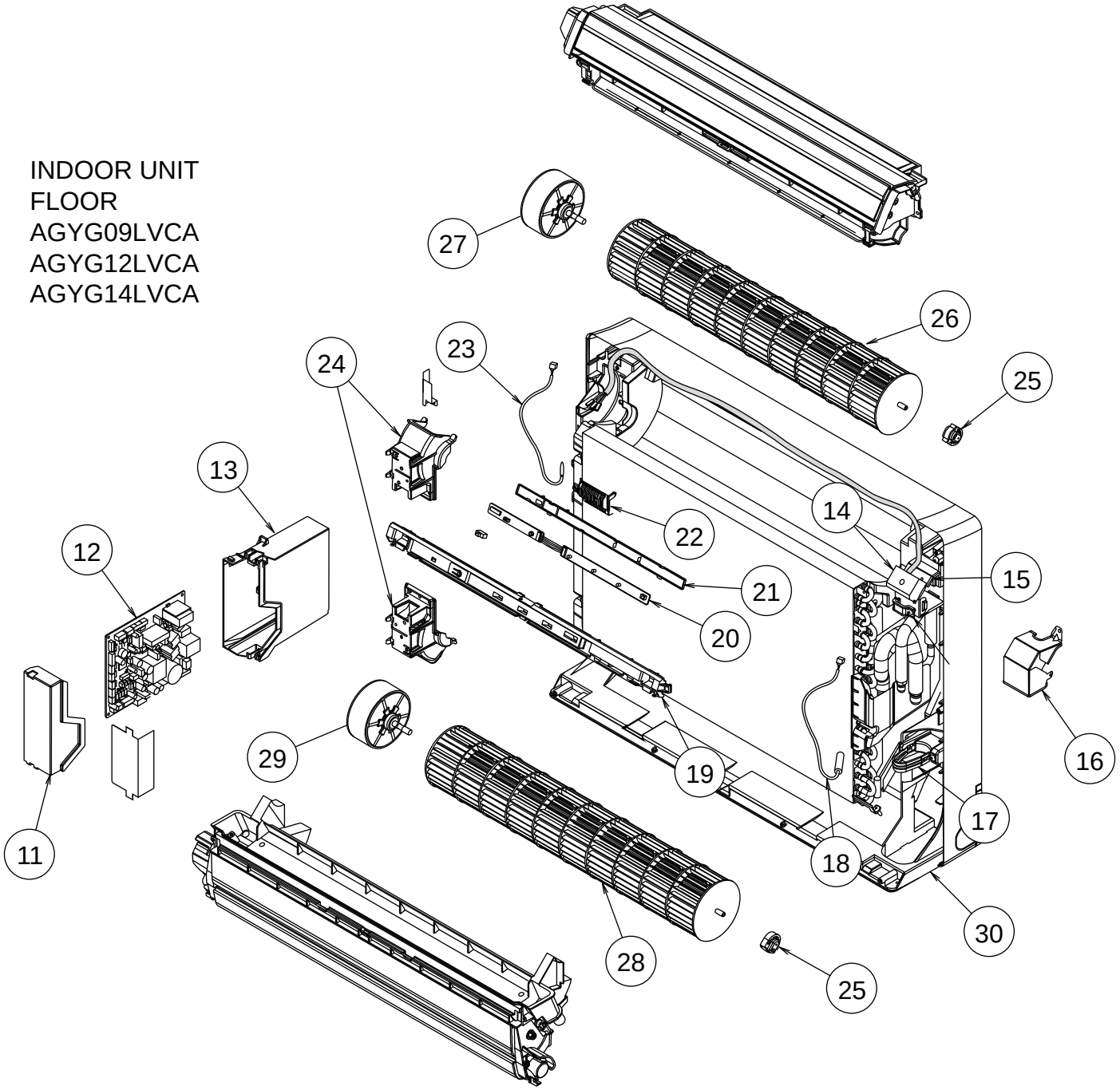

Ref	Description	Parts number	
11	Control Cover	9316201019	
12	Main PCB (09)	9708532011	
12	Main PCB (12)	9708532028	
12	Main PCB (14)	9708532035	
13	Control Box	9316200012	
14	Terminal	9900385026	
15	Bracket (Terminal)	9316269019	
16	Cover (Terminal)	9316307018	
17	Bracket (Pipe)	9316270015	
18	Pipe Thermistor	9900425012	
19	Display Case	9316194014	

Ref	Description	Parts number	
20	Display PCB Assy	9707571042	
21	Display Cover	9316191013	
22	Thermistor Holder	9316192010	
23	Room Thermistor	9700801108	
24	Motor Holder	9316195011	
25	Bearing C Assy	9306628017	
26	Crossflow Fan Assy	9312004034	
27	Fan Motor, MFD-34TXN	9602850006	
28	Crossflow Fan B Assy	9316309012	
29	Fan Motor, MFD-14SXN	9602851003	
30	Base	9316193017	

INDOOR UNIT
FLOOR
AGYG09LVCA
AGYG12LVCA
AGYG14LVCA

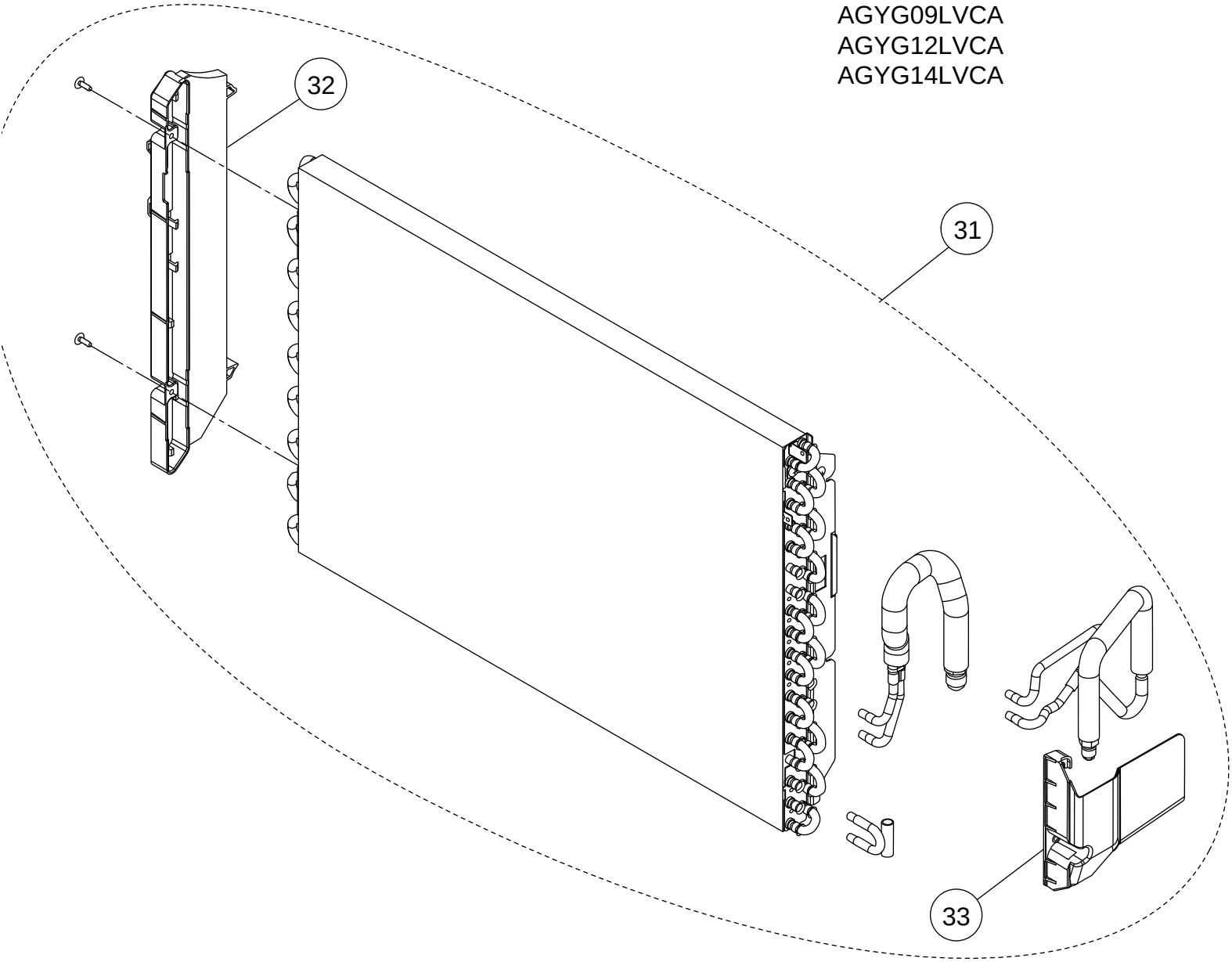

Ref	Description	Parts number	
31	Evaporator Total Assy (09, 12)	9316091016	
31	Evaporator Total Assy (14)	9316091023	
32	Evaporator Holder	9316199019	
33	Water Seal	9316271012	

INDOOR UNIT
FLOOR
AGYG09LVCA
AGYG12LVCA
AGYG14LVCA
Casing assy

Ref	Description	Parts number	
41	Top Cover	9316207011	
42	R and L Louver U	9316208018	
43	Fan Guard	9316211018	
44	Casing	9316204010	
45	Gear Case	9316213012	
46	Gear A	9309994003	
47	Motor Step (up / down)	9900384043	
48	Louver U	9316205017	
49	Louver Z	9316206014	
50	REF (Casing)	9316378018	

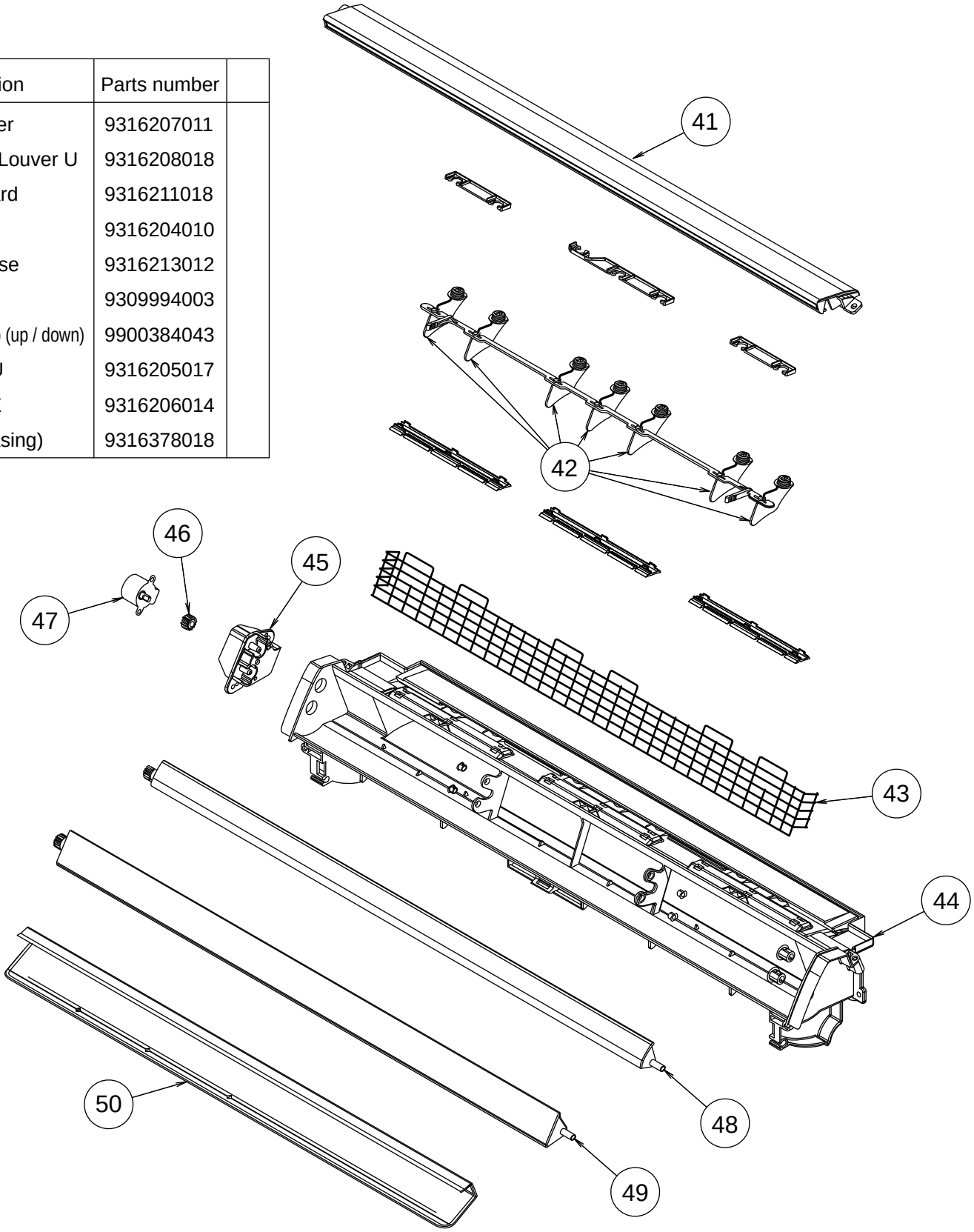

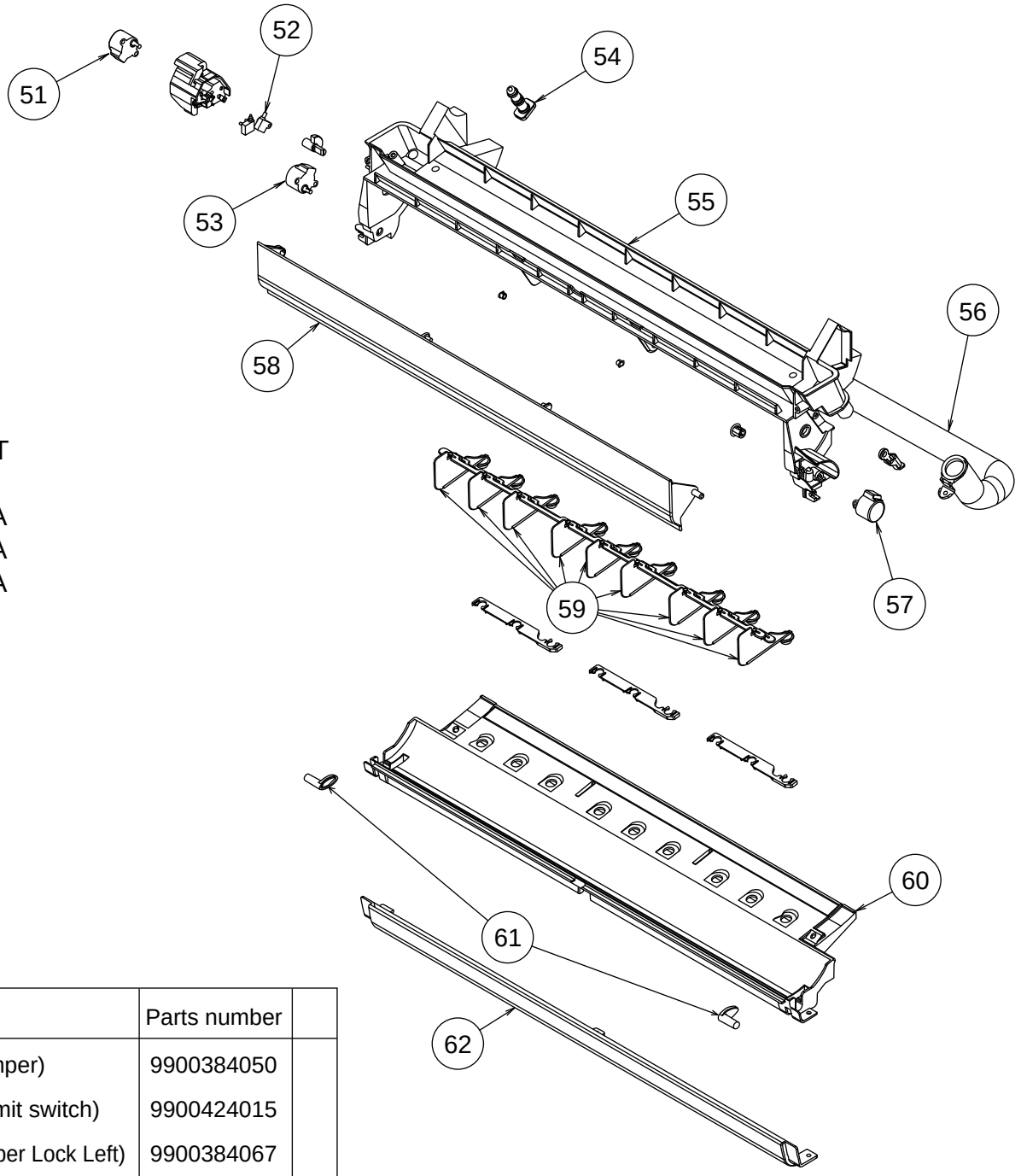

INDOOR UNIT
FLOOR
AGYG09LVCA
AGYG12LVCA
AGYG14LVCA
Casing aast

Ref	Description	Parts number	
51	Motor Step (Damper)	9900384050	
52	Switch Micro (Limit switch)	9900424015	
53	Motor Step (Damper Lock Left)	9900384067	
54	Drain Cap	9316177017	
55	Drain Pan U	9316214019	
56	Drain Hose Assy	9314147029	
57	Motor Step (Damper Lock Right)	9900384074	
58	Damper	9316216013	
59	R and L Louver Z	9316334014	
60	Drain Pan Z	9316215016	
61	Stopper	9316219014	
62	Cover (Lower)	9316374010	
--	Fan Guard Z	9316918009	

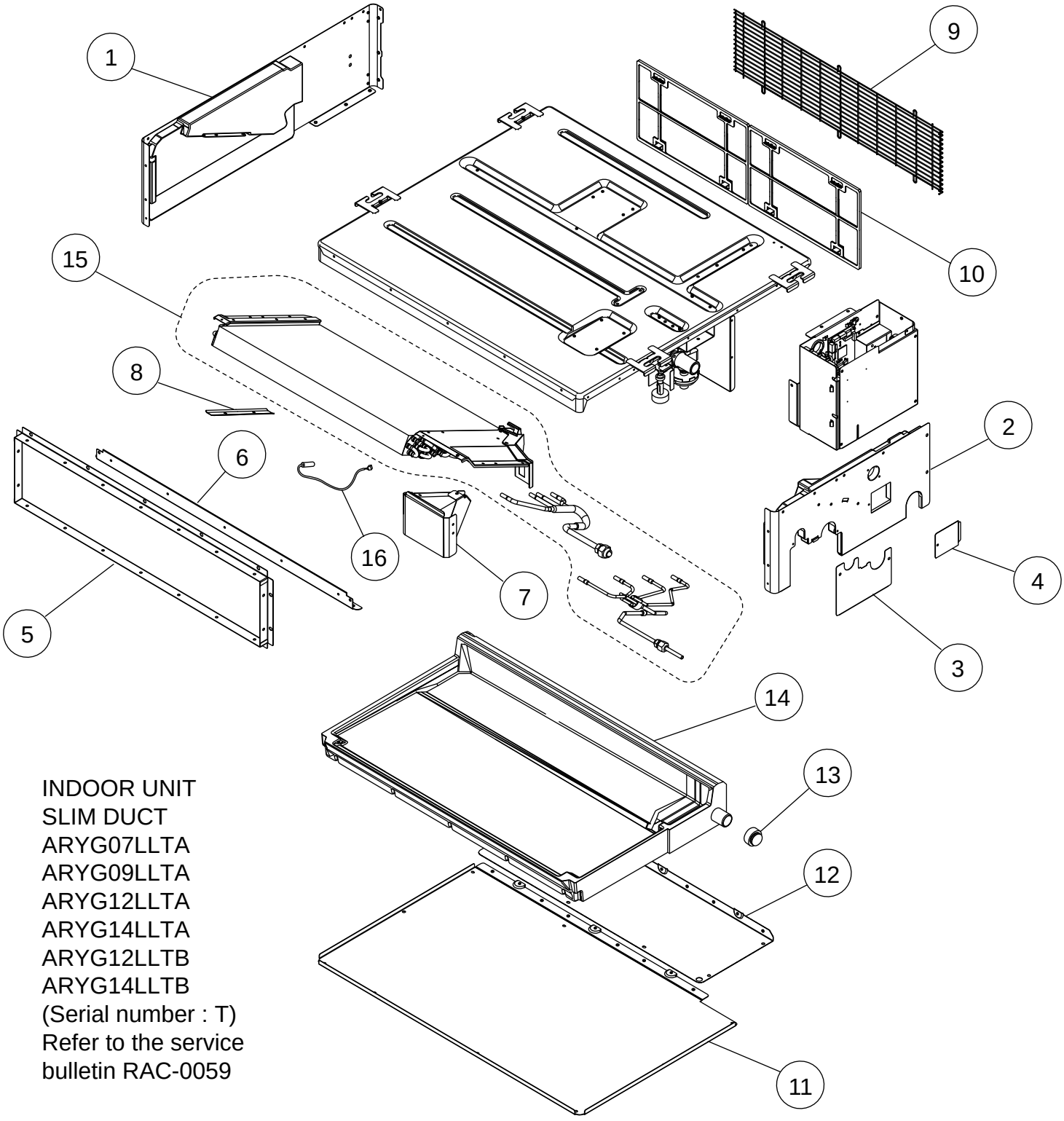

INDOOR UNIT
SLIM DUCT
ARYG07LLTA
ARYG09LLTA
ARYG12LLTA
ARYG14LLTA
ARYG12LLTB
ARYG14LLTB
(Serial number : T)
Refer to the service bulletin RAC-0059

Ref	Description	Parts number	
1	Side Panel R Sub Assy	9379906005	
2	Side Panel L Sub Assy	9379907002	
3	Pipe Panel Sub Assy	9379900003	
4	Panel (Window) Sub Assy	9379915007	
5	Outlet Frame Sub Assy	9379909006	
6	Front Panel (2 Fan)	9379593007	
7	Valve Cover Sub Assy	9379576000	
8	Cover Pipe Sub Assy	9380033004	
9	Fan Guard (2 Fan)	9379637008	
10	Air Filter	9379574006	

Ref	Description	Parts number	
11	Main Panel Sub Assy	9379902007	
12	Cabinet Panel (2 Fan)	9379596008	
13	Drain Cap	9358746004	
14	Drain Pan Sub Assy	9379901000	
15	Evaporater Total Assy (07)	9364499666	
15	Evaporater Total Assy (09, 12)	9364499581	
15	Evaporater Total Assy (14)	9364499673	
16	Pipe Thermistor	9900498085	
--	Hose Sub Assy	9378450103	

INDOOR UNIT
SLIM DUCT
ARYG07LLTA
ARYG09LLTA
ARYG12LLTA
ARYG14LLTA
ARYG12LLTB
ARYG14LLTB
(Serial number : T)

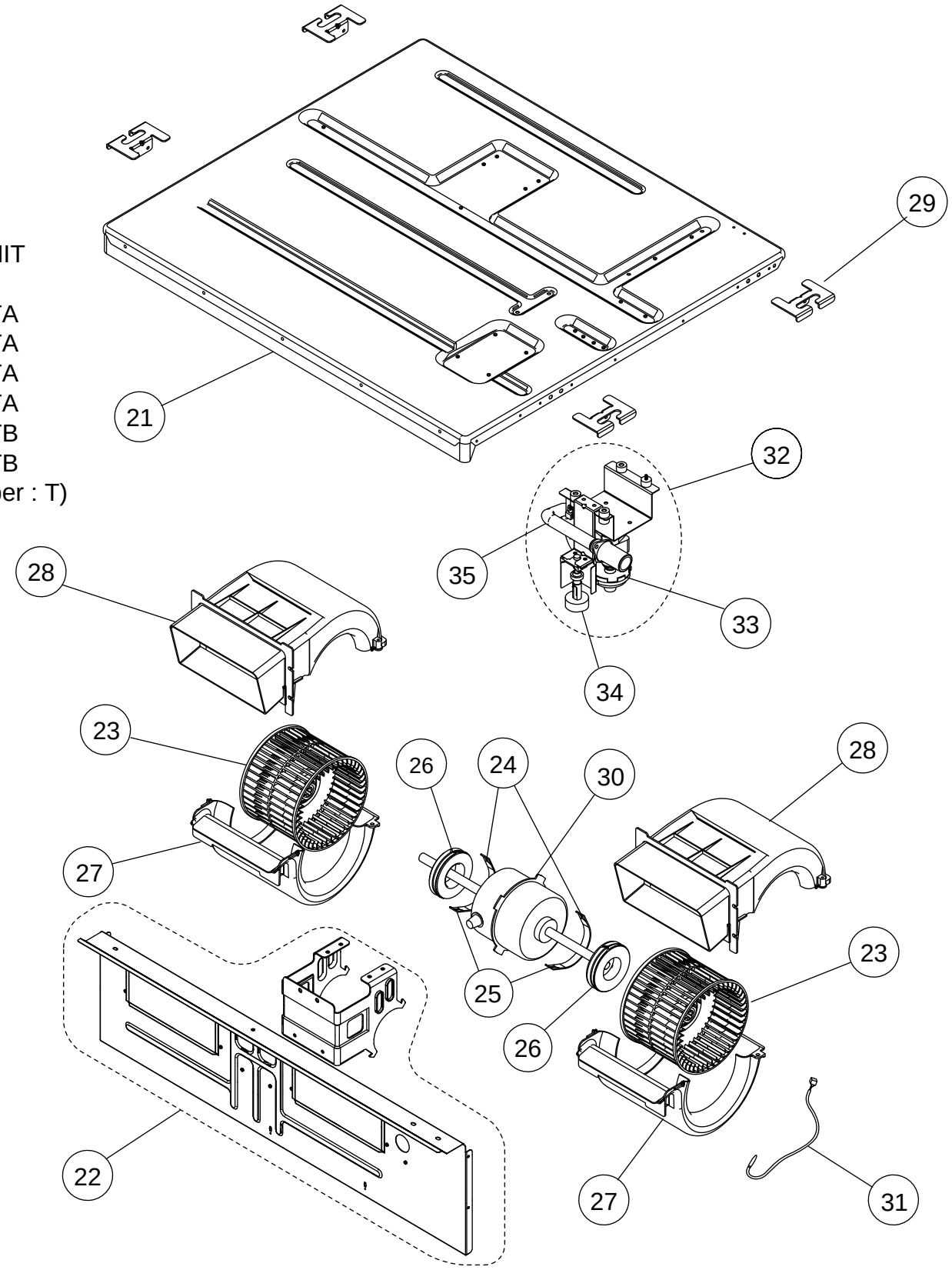

Ref	Description	Parts number	
21	Top Panel Sub Assy	9379908009	
22	Separator Sub Assy	9379898003	
23	Sirroco Fan Assy	9379570015	
24	Motor Band Assy	9379613002	
25	Motor Band	9379614009	
26	Rubber (Vibration Proof)	9379644006	
27	Casing B	9379572002	
28	Casing U	9379571005	

Ref	Description	Parts number	
29	Hook Metal	9379889001	
30	Fan Motor Assy (07)	9602966011	
30	Fan Motor Assy (09, 12, 14)	9602967018	
31	Room Thermistor	9703299247	
32	Drain Pump Sub Assy	9379914000	
33	Pump Assy	9900472047	
34	Float Switch	9900465032	
35	Drain Hose Assy	9379913003	

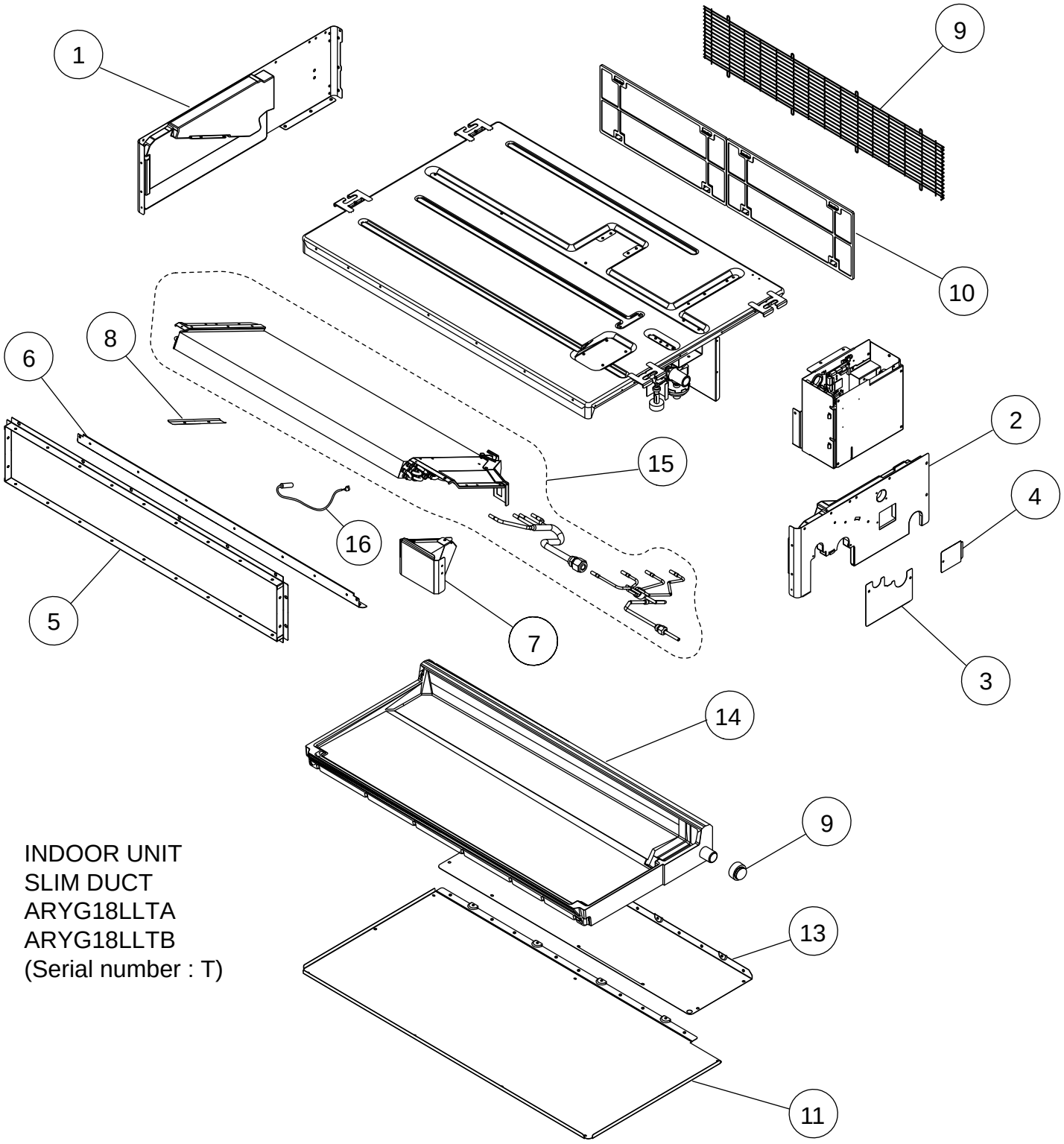

INDOOR UNIT
SLIM DUCT
ARYG18LLTA
ARYG18LLTB
(Serial number : T)

Ref	Description	Parts number	
1	Side Panel R Sub Assy	9379906005	
2	Side Panel L Sub Assy	9379907002	
3	Pipe Panel Sub Assy	9379900003	
4	Panel (Window) Sub Assy	9379915007	
5	Outlet Frame Sub Assy	9379909013	
6	Front Panel (3 Fan)	9379594004	
7	Valve Cover Sub Assy	9379576000	
8	Cover Pipe Sub Assy	9380033004	
9	Fan Guard (3 Fan)	9379638005	

Ref	Description	Parts number	
10	Air Filter	9379575003	
11	Main Panel Sub Assy	9379902014	
12	Cabinet Panel (3 Fan)	9379597005	
13	Drain Cap	9358746004	
14	Drain Pan Sub Assy	9379901017	
15	Evaporator Total Assy	9364499604	
16	Pipe Thermistor	9900498085	
--	Hose Sub Assy	9378450103	

INDOOR UNIT
SLIM DUCT
ARYG18LLTA
ARYG18LLTB
(Serial number : T)

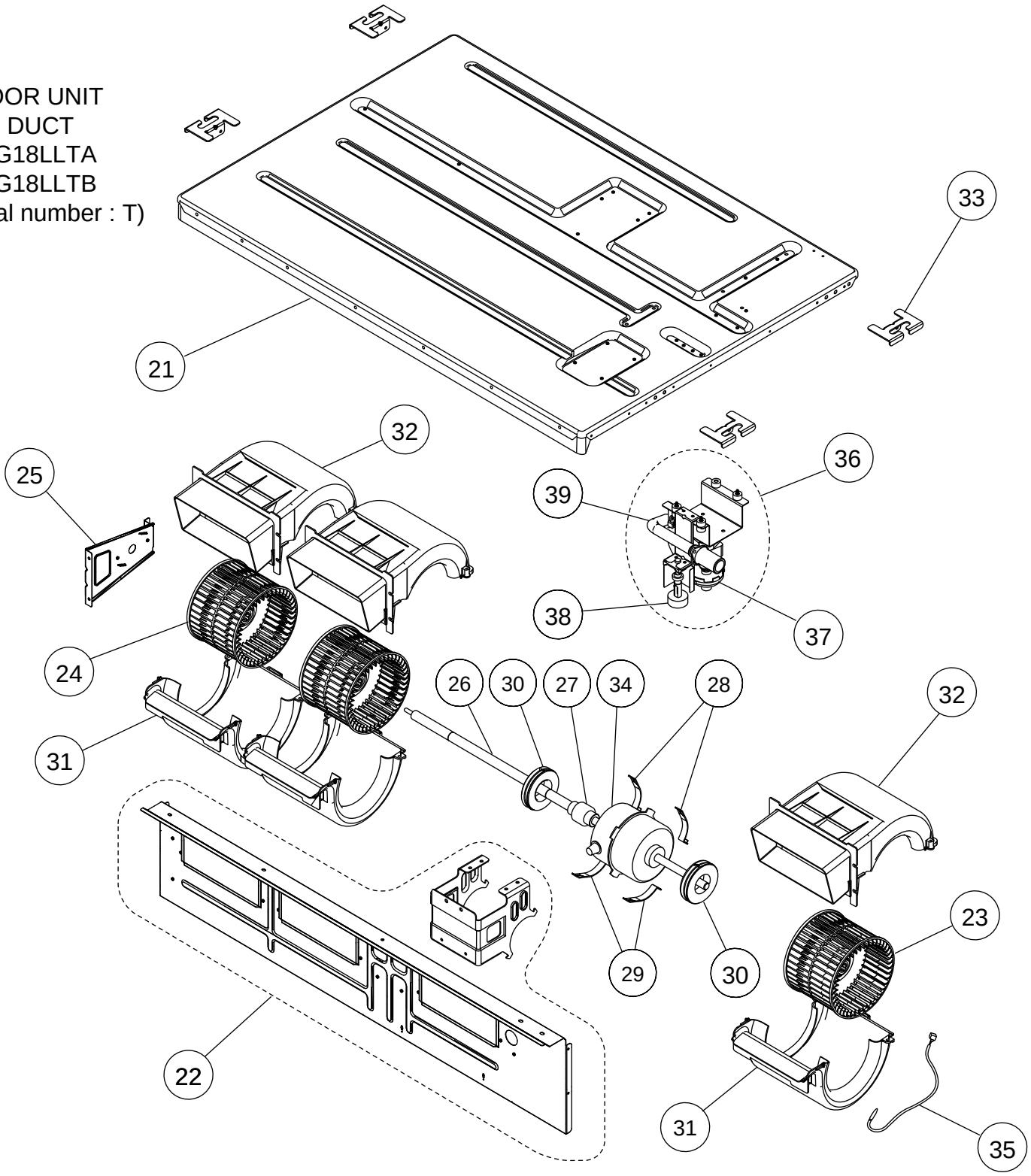

Ref	Description	Parts number	
21	Top Panel Sub Assy	9379908016	
22	Separator Sub Assy	9379898010	
23	Sirroco Fan Assy	9379570022	
24	Sirroco Fan Assy	9379570039	
25	Bracket (Bearing Sub Assy)	9379627009	
26	Shaft Assy	9379805001	
27	Joint Assy	9378038011	
28	Motor Band Assy	9379613002	
29	Motor Band	9379614009	
30	Rubber (Vibration Proof)	9379644006	

Ref	Description	Parts number	
31	Casing B	9379572002	
32	Casing U	9379571005	
33	Hook Metal	9379889001	
34	Fan Motor Assy	9602968015	
35	Thermistor (Room)	9703299247	
36	Drain Pump Sub Assy	9379914000	
37	Pump Assy	9900472047	
38	Float Switch	9900465032	
39	Drain Hose Assy	9379913003	

INDOOR UNIT
SLIM DUCT
ARYG07LLTA
ARYG09LLTA
ARYG12LLTA
ARYG14LLTA
ARYG18LLTA
ARYG12LLTB
ARYG14LLTB
ARYG18LLTB
(Serial number : T)

Ref	Description	Parts number	
41	Control Cover Sub Assy	9379806039	
42	Control Box Assy	9380041023	
43	PCB Holder	9379402002	
44	Power Supply PCB	9707398267	
45	Main PCB (07)	9707393781	
45	Main PCB (09)	9707393798	
45	Main PCB (12LLTA)	9707393804	
45	Main PCB (14LLTA)	9707393811	
45	Main PCB (18LLTA)	9707393828	
45	Main PCB (12LLTB)	9707393897	
45	Main PCB (14LLTB)	9707393903	
45	Main PCB (18LLTB)	9707393910	
46	Reactor Assy	9707457018	
47	Terminal 3P	9306489045	
48	Terminal 3P (Wired Remote)	9703345012	
49	Terminal Bracket	9380132011	
--	Wired Remote Control	9318593013	

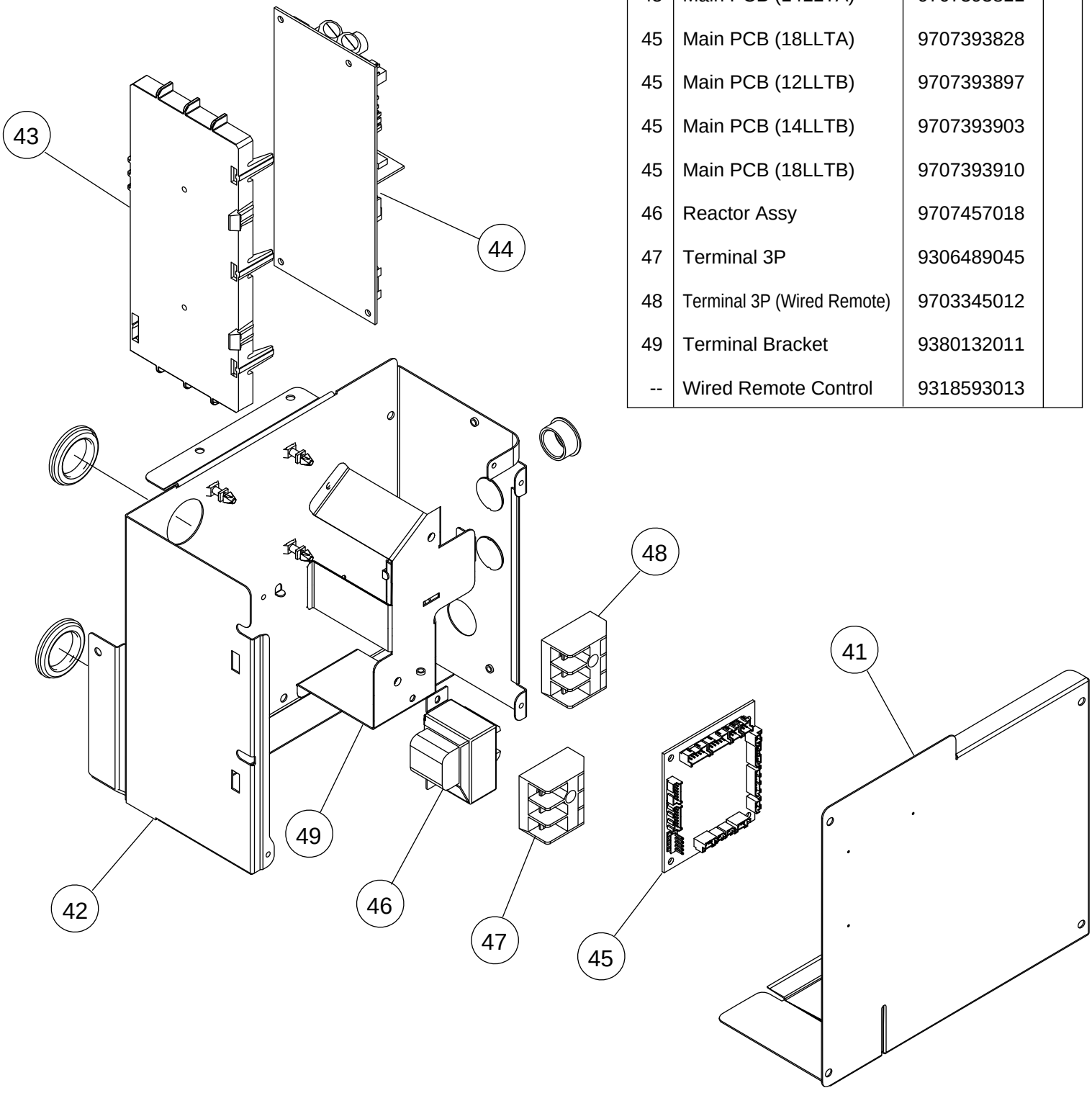

INDOOR UNIT
SLIM DUCT
ARYG07LLTA
ARYG09LLTA
ARYG12LLTB
ARYG14LLTB
(Serial number : R)
Refer to the service bulletin RAC-0059

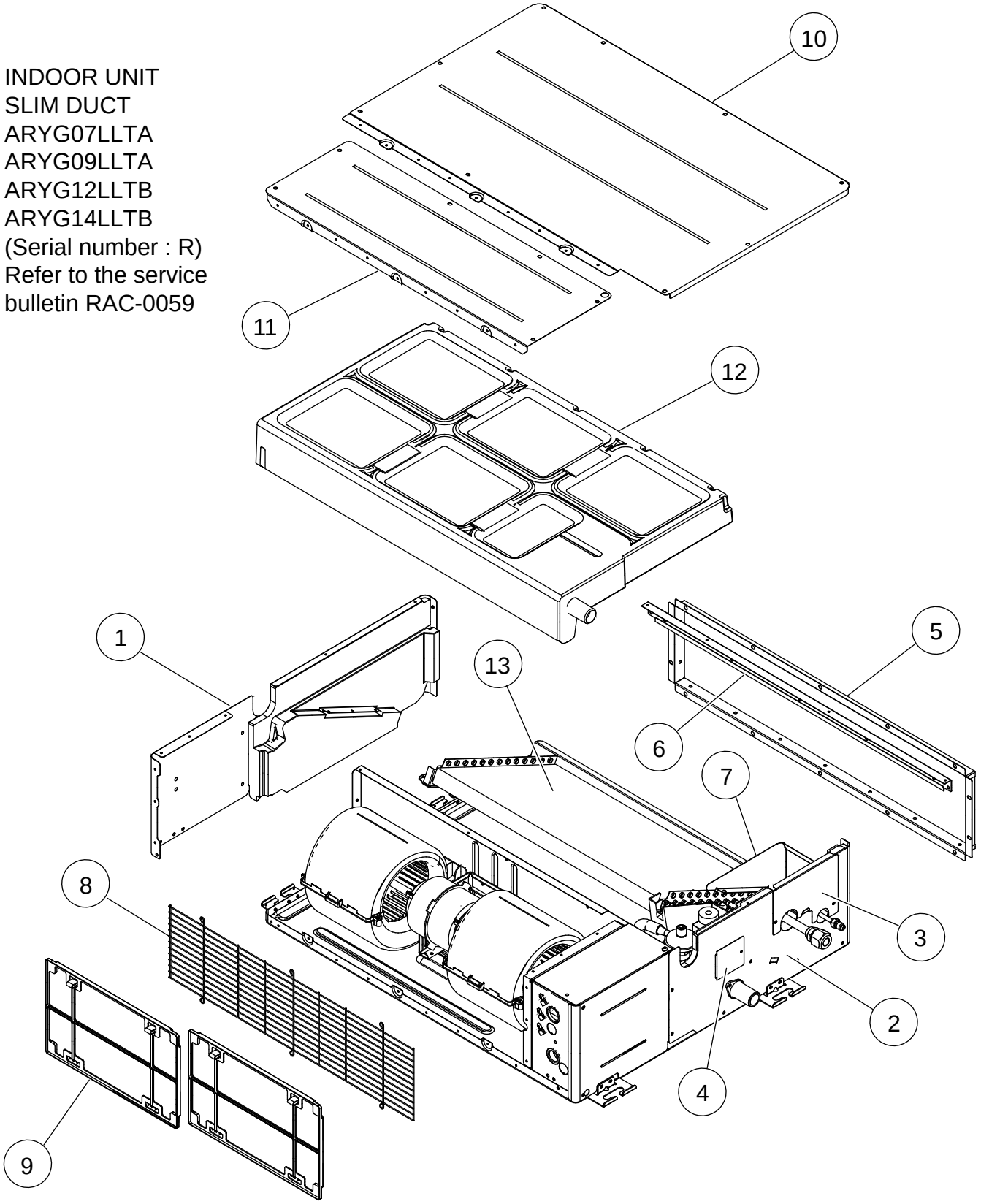

Ref	Description	Parts number	
1	Side Panel R Sub Assy	9379906012	
2	Side Panel L Sub Assy	9379907019	
3	Pipe Panel Sub Assy	9379900003	
4	Panel (Window) Sub Assy	9379915007	
5	Outlet Frame Assy	9380042006	
6	Front Panel (2 Fan)	9380594000	
7	Valve Cover Sub Assy	9379576017	
8	Fan Guard (2 Fan)	9380589006	

Ref	Description	Parts number	
9	Air Filter	9379574006	
10	Main Panel (2 Fan)	9380602002	
11	Cabinet Panel (2 Fan)	9380597001	
12	Drain Pan Sub Assy	9379901048	
13	Evaporater Total Assy (07)	9380682080	
13	Evaporater Total Assy (09, 12)	9380682042	
13	Evaporater Total Assy (14)	9380682059	

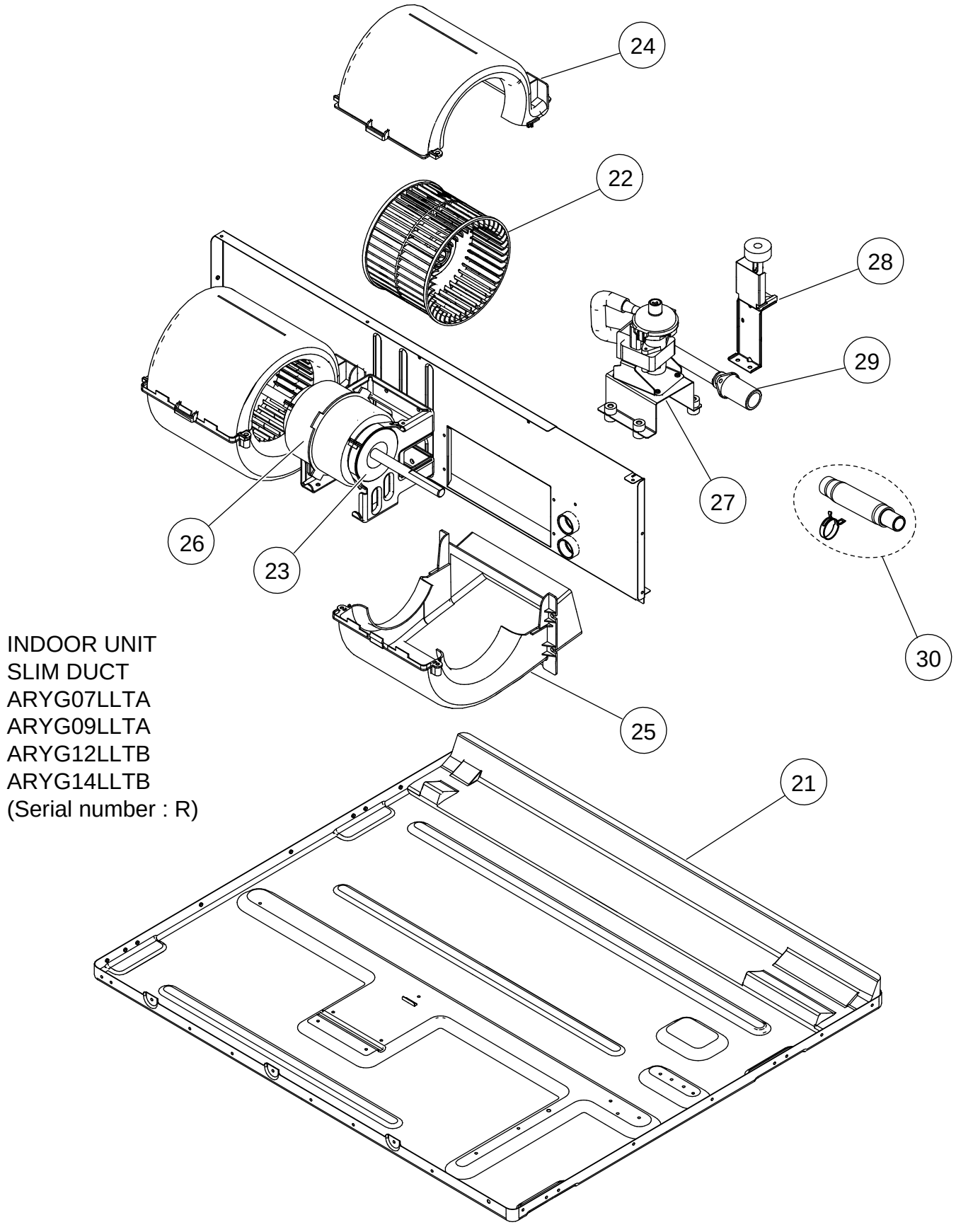

INDOOR UNIT
SLIM DUCT
ARYG07LLTA
ARYG09LLTA
ARYG12LLTB
ARYG14LLTB
(Serial number : R)

Ref	Description	Parts number	
21	Top Panel Sub Assy	9379908030	
22	Sirroco Fan Assy	9379570015	
23	Rubber (Vibration Proof)	9379644006	
24	Casing B	9379572002	
25	Casing U	9379571005	
26	Fan Motor Assy (07)	9603139018	

Ref	Description	Parts number	
26	Fan Motor (09, 12, 14)	9602967025	
27	Drain Pump Sub Assy	9379914024	
28	Float Switch Sub Assy	9378593022	
29	Drain Hose Assy	9379913003	
30	Hose Sub Assy	9378450097	

INDOOR UNIT
SLIM DUCT
ARYG18LLTB
(Serial number : R)

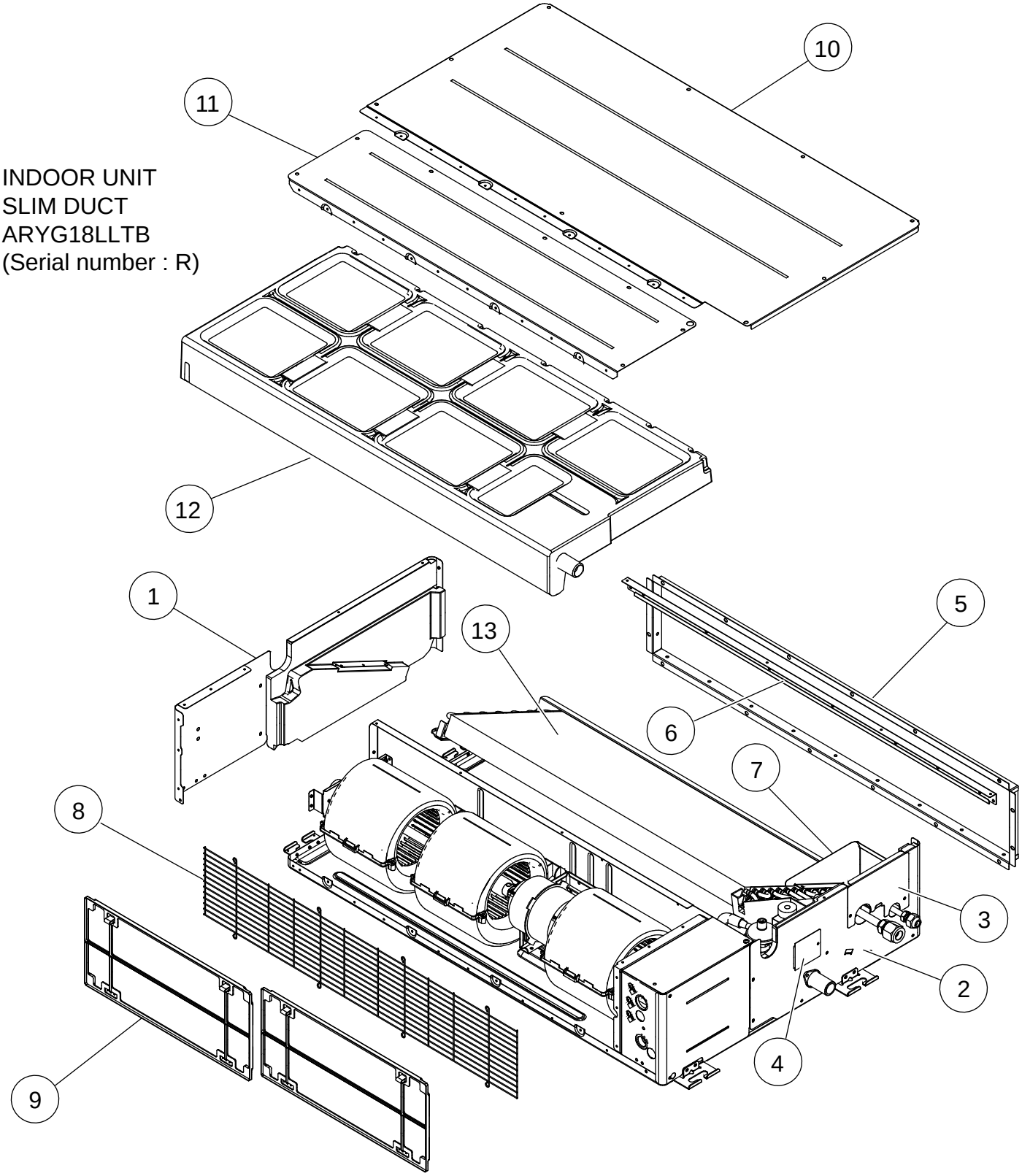

Ref	Description	Parts number	
1	Side Panel R Sub Assy	9379906012	
2	Side Panel L Sub Assy	9379907019	
3	Pipe Panel Sub Assy	9379900003	
4	Panel (Window) Sub Assy	9379915007	
5	Outlet Frame Assy	9380042013	
6	Front Panel (3 Fan)	9380595007	
7	Valve Cover Sub Assy	9379576017	

Ref	Description	Parts number	
8	Fan Guard (3 Fan)	9380590002	
9	Air Filter	9379575003	
10	Main Panel (3 Fan)	9380603009	
11	Cabinet Panel (3 Fan)	9380598008	
12	Drain Pan Sub Assy	9379901055	
13	Evaporator Total Assy	9380682066	

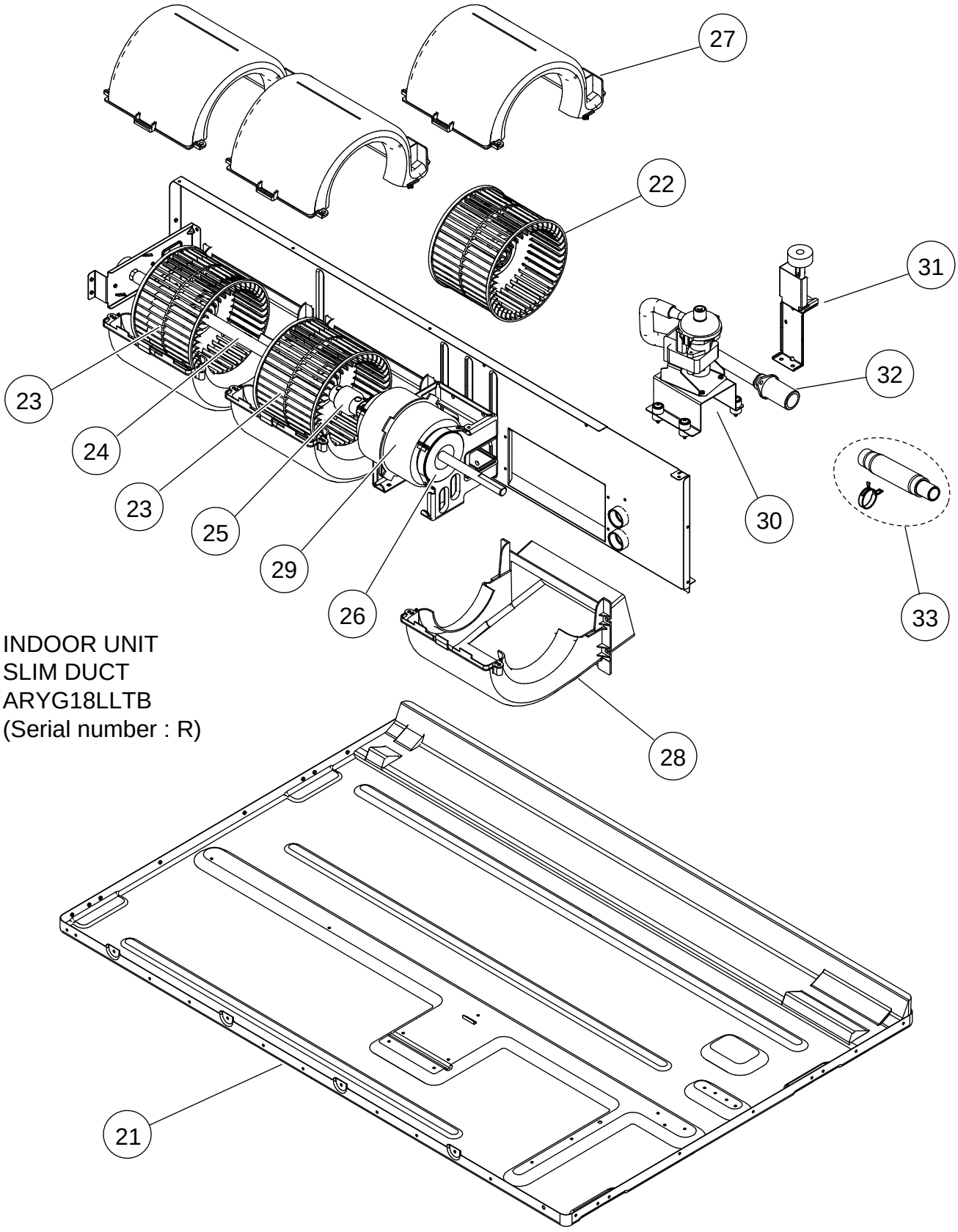

INDOOR UNIT
SLIM DUCT
ARYG18LLTB
(Serial number : R)

Ref	Description	Parts number	
21	Top Panel Sub Assy	9379908047	
22	Sirroco Fan Assy	9379570022	
23	Sirroco Fan Assy	9379570039	
24	Shaft	9380398004	
25	Joint Assy	9378038011	
26	Rubber (Vibration Proof)	9379644006	
27	Casing B	9379572002	

Ref	Description	Parts number	
28	Casing U	9379571005	
29	Fan Motor Assy	9602968022	
30	Drain Pump Sub Assy	9379914024	
31	Float Switch Sub Assy	9378593022	
32	Drain Hose Assy	9379913003	
33	Hose Sub Assy	9378450097	

INDOOR UNIT
SLIM DUCT
ARYG07LLTA
ARYG09LLTA
ARYG12LLTB
ARYG14LLTB
ARYG18LLTB
(Serial number : R)

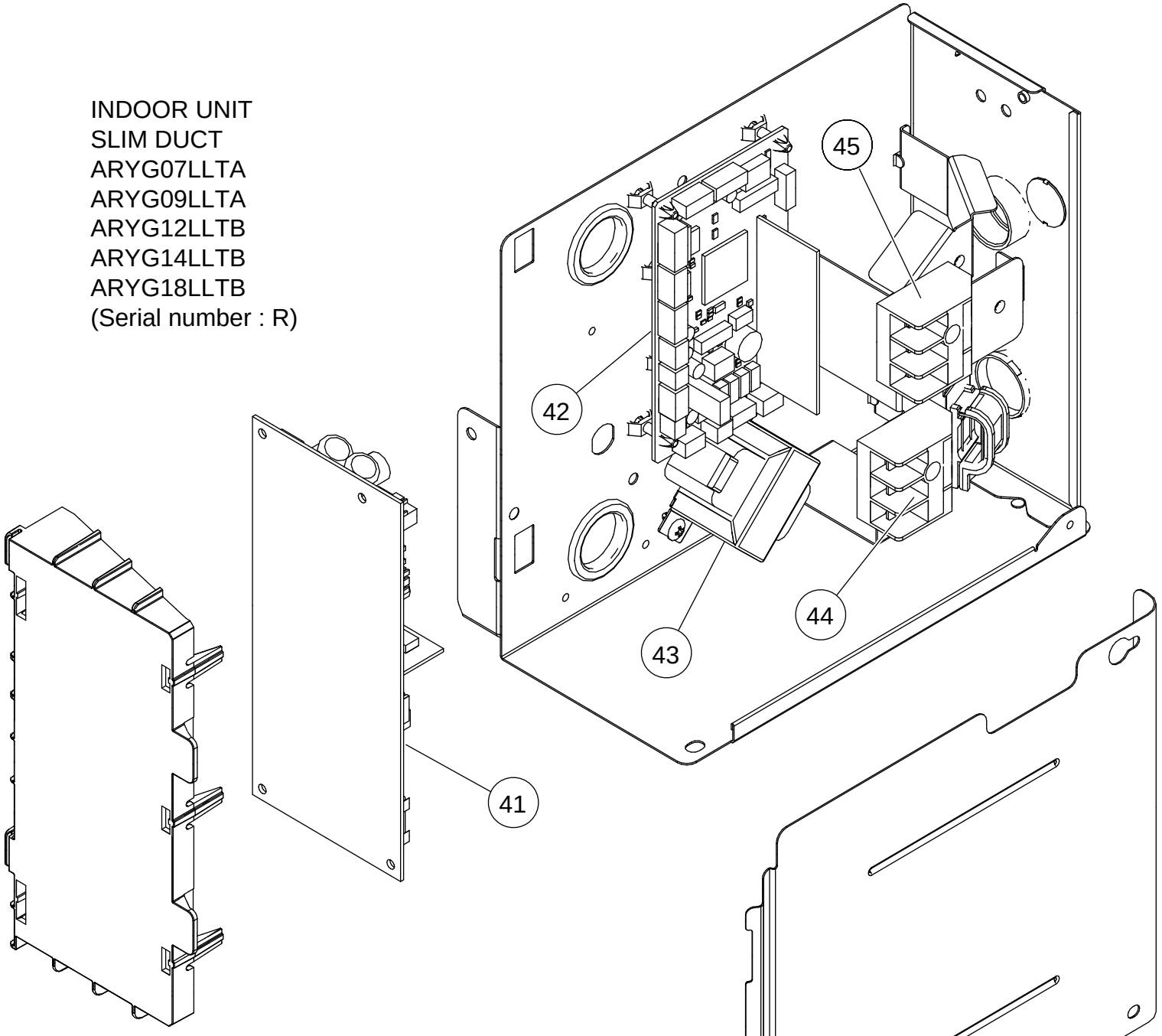

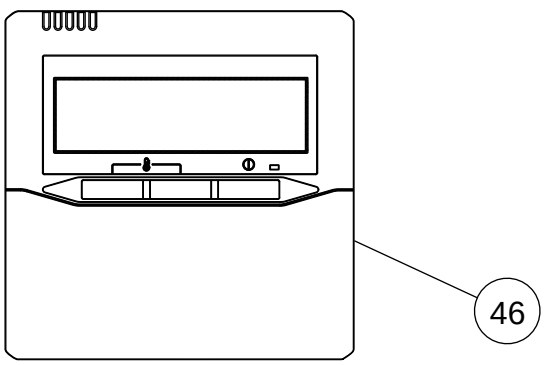

Ref	Description	Parts number	
41	Power Supply PCB	9707398267	
42	Main PCB (07)	9709245279	
42	Main PCB (09)	9709245286	
42	Main PCB (12)	9709245293	
42	Main PCB (14)	9709245309	
42	Main PCB (18)	9709245316	
43	Reactor Assy	9707457018	
44	Terminal 3P	9306489045	
45	Terminal 3P (Wired Remote)	9703345012	
46	Wired Remote Control	9318593013	
--	Room Thermistor	9900653002	
--	Pipe Thermistor	9900498108	

INDOOR UNIT
FLOOR CEILING
ABYG14LVTA
ABYG18LVTA
ABYG18LVTB

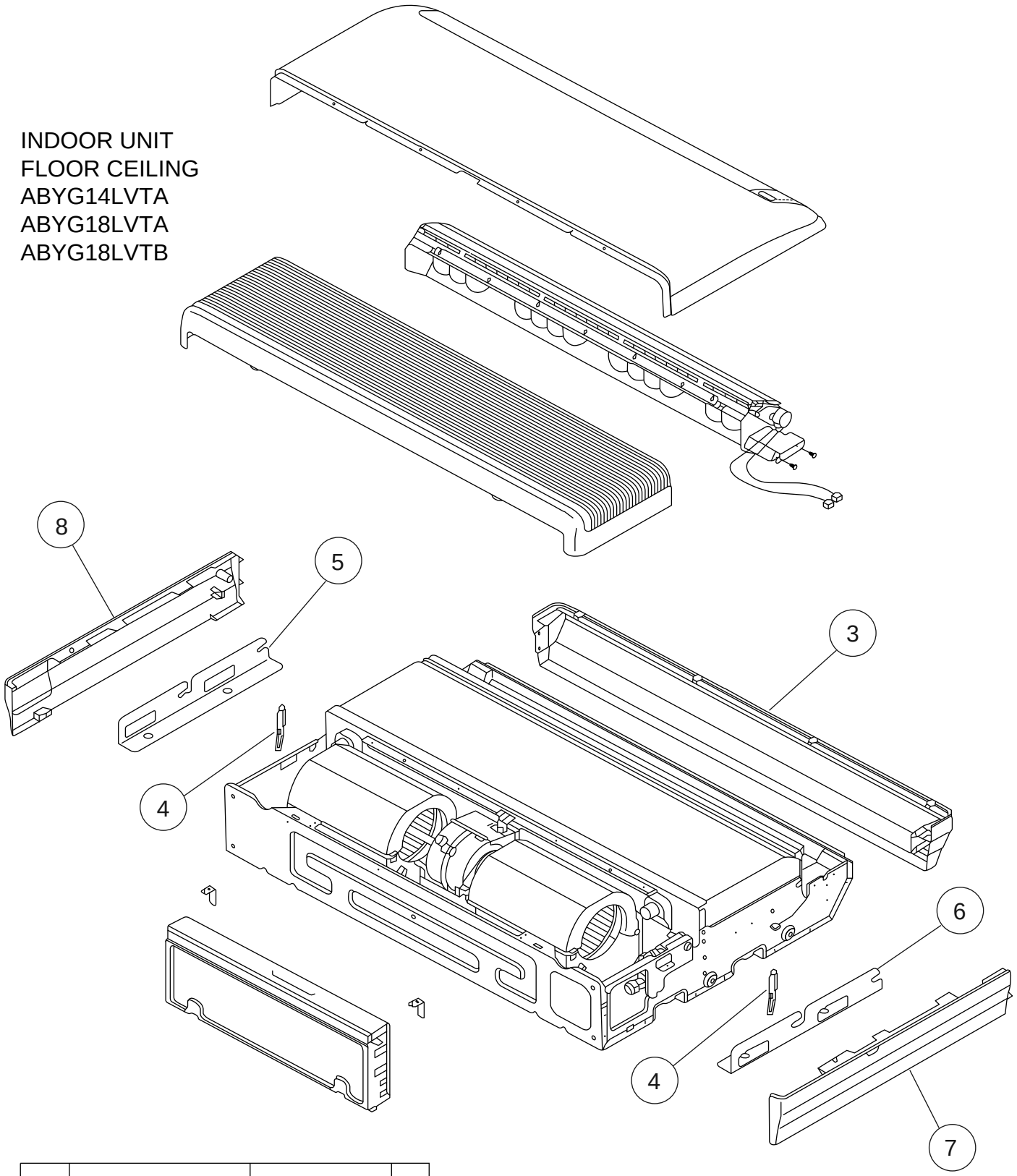

Ref.	Description	Part number	
1	Remote	9379219037	
2	Remote Holder	9305642045	
3	Top Cover	9358534021	
4	Arm	9358565001	
5	Hanger Bracket L	9358596005	
6	Hanger Bracket R	9358595008	
7	Cosmetic Panel R	9358535028	
8	Cosmetic Panel L	9358536025	

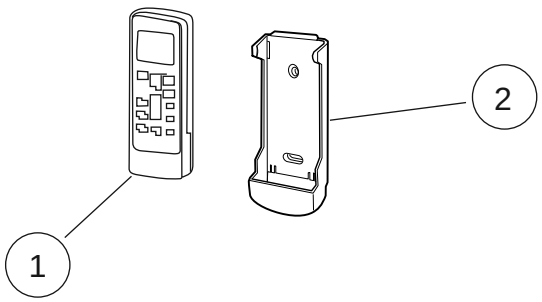

INDOOR UNIT
FLOOR / CEILING
ABYG14LVTA
ABYG18LVTA
ABYG18LVTB
Panel assy

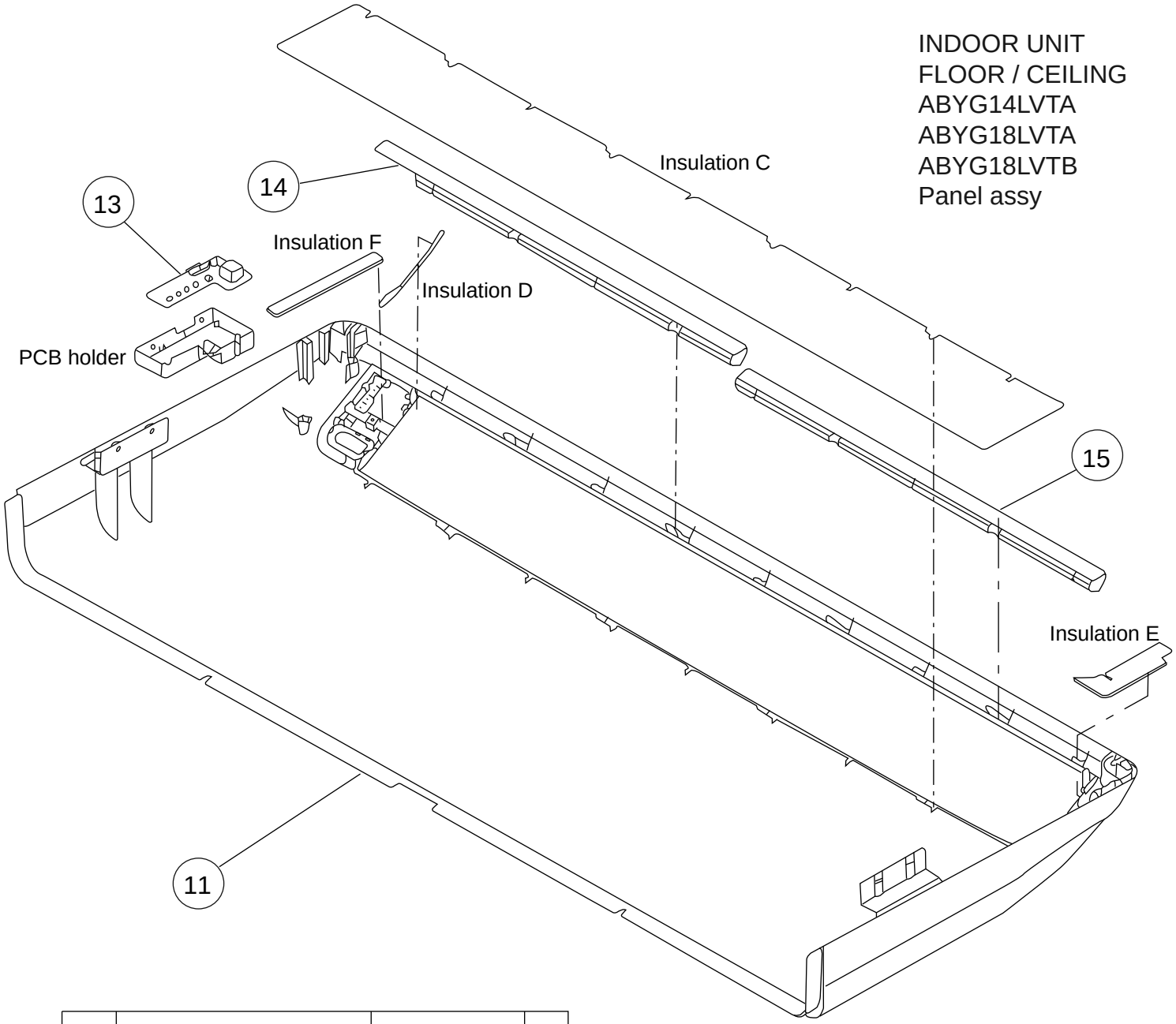

Ref.	Description	Part number	
11	Panel	9358531259	
12	Side Cover R Assy	9359069102	
13	Indicator PCB Assy	9705798090	
14	Insulation (Panel) A	9358574003	
15	Insulation (Panel) B	9358914007	
--	Panel Assy (with side cover R)	9359076322	

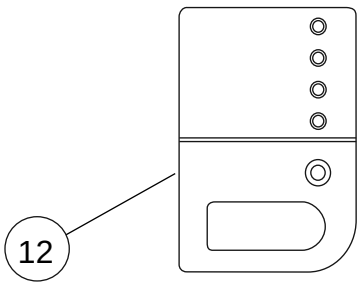

INDOOR UNIT
FLOOR / CEILING
ABYG14LVTA
ABYG18LVTA
ABYG18LVTB
Grille

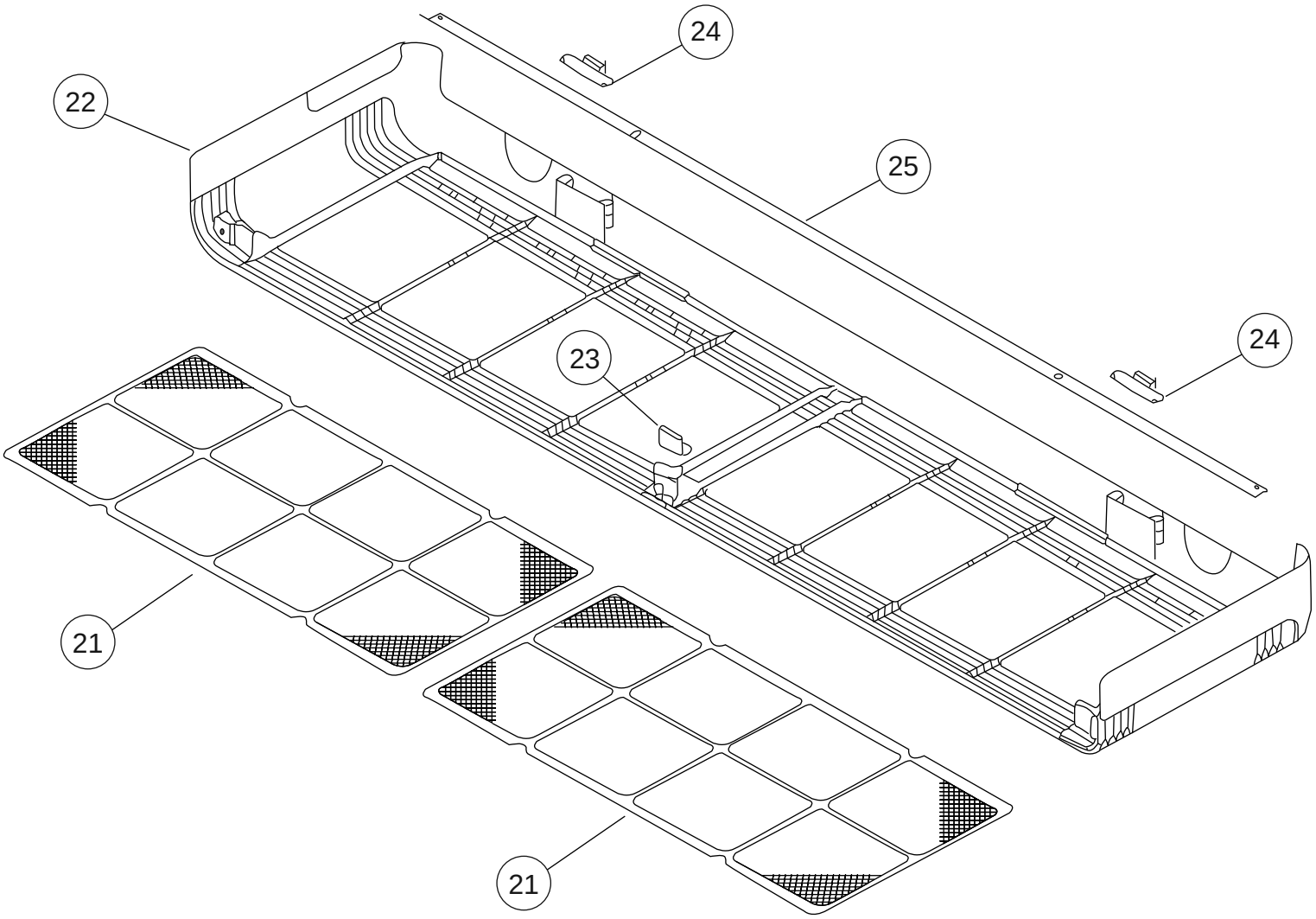

Ref.	Description	Part number	
21	Air Filter	9358567029	
22	Grill F	9358532027	
23	Arm Bracket	9359281009	
24	Grille Support	9358602003	
25	Filter Bracket	9358607008	

INDOOR UNIT
FLOOR / CEILING
ABYG14LVTA
ABYG18LVTA
ABYG18LVTB
Kit (Flap base)

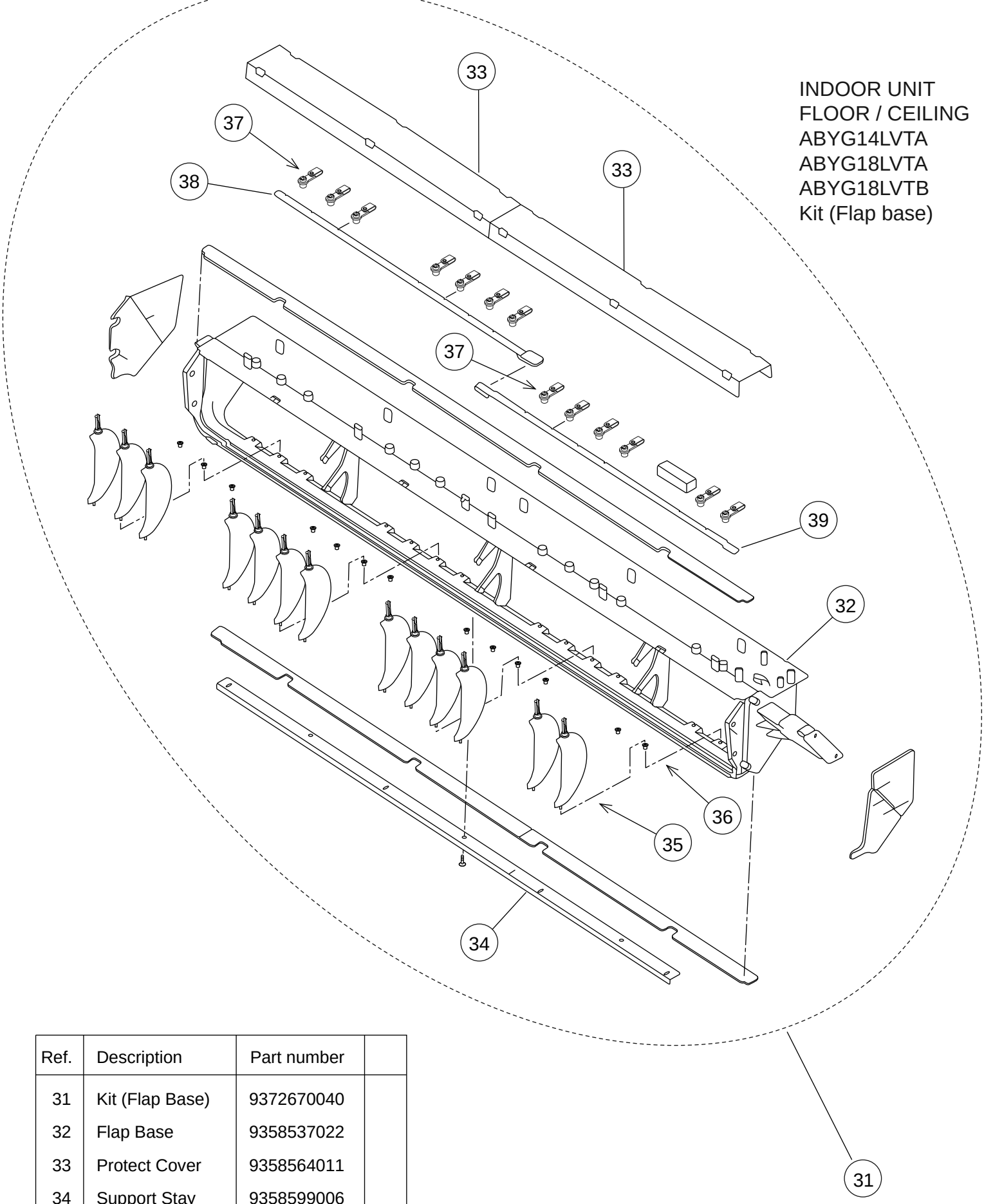

Ref.	Description	Part number	
31	Kit (Flap Base)	9372670040	
32	Flap Base	9358537022	
33	Protect Cover	9358564011	
34	Support Stay	9358599006	
35	Louver	9358561027	
36	Bushing B	9358554005	
37	Louver Stopper	9358555002	
38	Louver Rod	9358559017	
39	Motor Rod	9358560013	

INDOOR UNIT
FLOOR / CEILING
ABYG14LVTA
ABYG18LVTA
ABYG18LVTB
Flap base sub assy

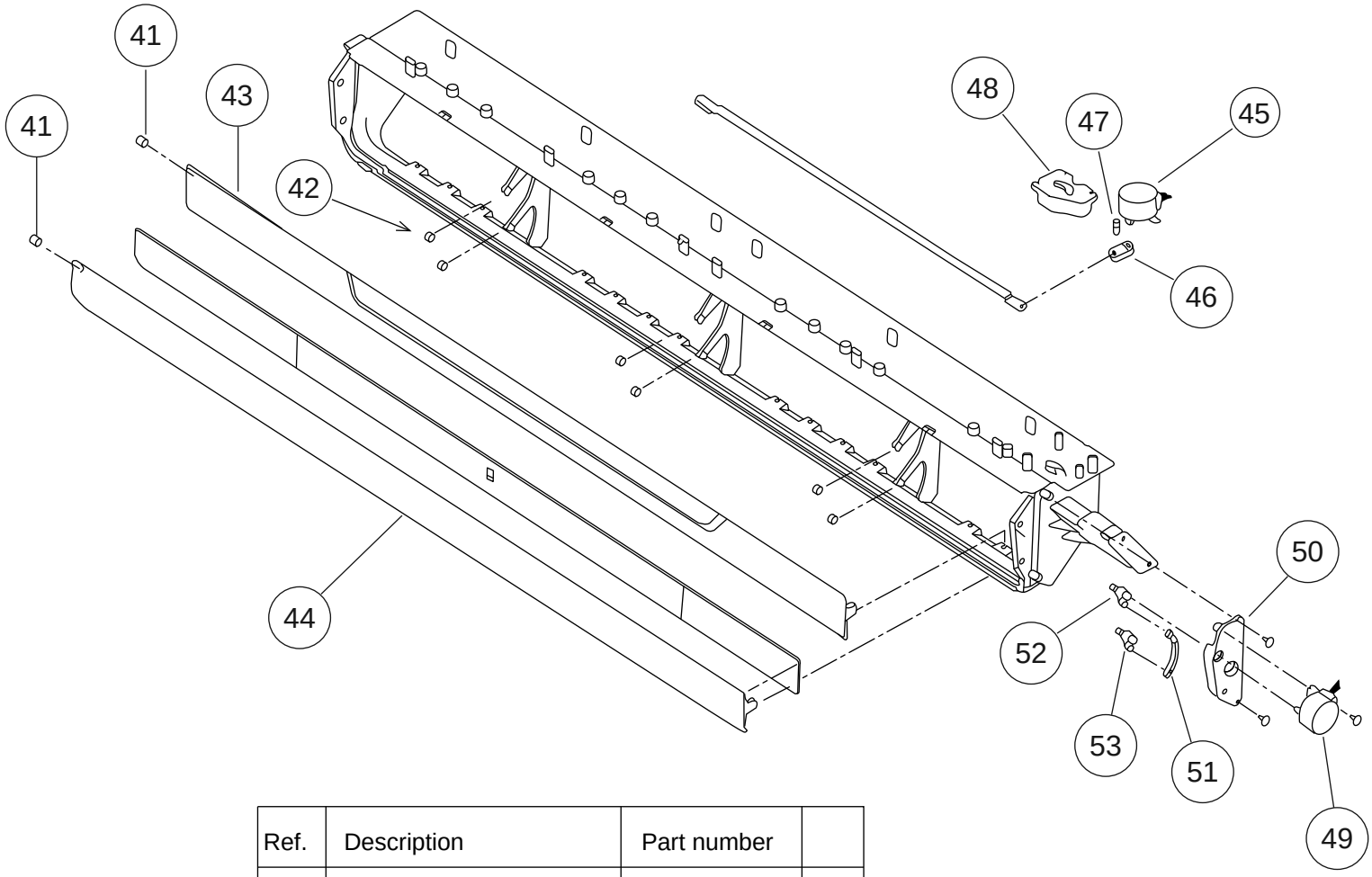

Ref.	Description	Part number	
41	Bushing	9357942001	
42	Bushing C	9358553008	
43	Flap (Upper) F	9358538029	
44	Kit (Flap Lower)	9372671023	
45	Step Motor H	9900297015	
46	Louver Link	9358556009	
47	Louver Shaft	9358557006	
48	Louver Link Cover	9358558010	
49	Step Motor-V	9900362010	
50	Motor Base	9358562017	
51	Motor Rod-A (Step V)	9358550007	
52	Flap Link-Upper (Step V)	9358551004	
53	Flap Link-Lower (Step V)	9358552001	

INDOOR UNIT
FLOOR / CEILING
ABYG14LVTA
ABYG18LVTA
ABYG18LVTB
Base assy

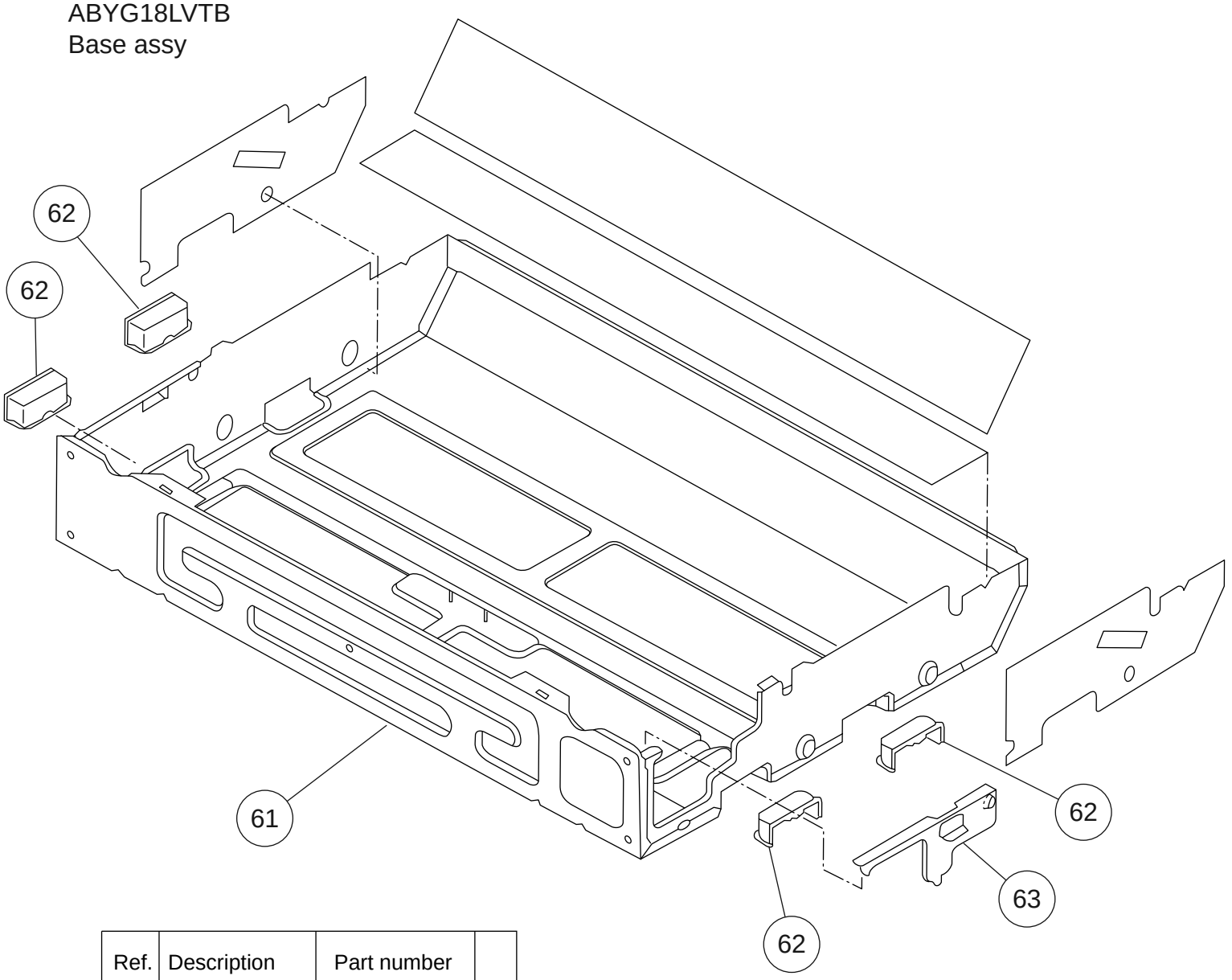

Ref.	Description	Part number	
61	Base Assy	9359061014	
62	Cap	9358563007	
63	Base Bracket	9358586006	

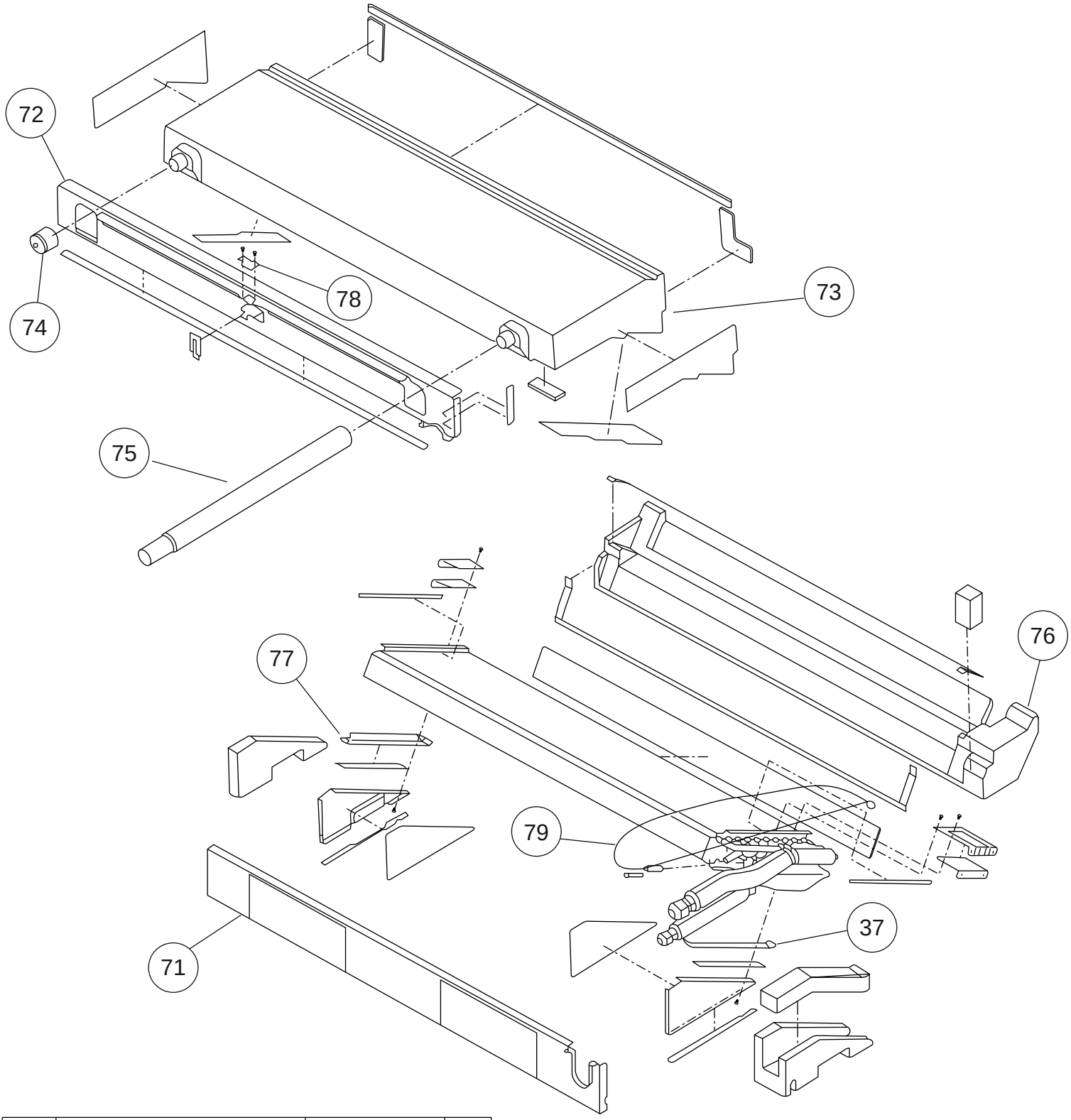

Ref.	Description	Part number	
71	Kit (Separate Wall A)	9372666012	
72	Kit (Separate Wall B)	9373448013	
73	Kit (Drain Pan Assy)	9372669013	
74	Drain Cap	9358746004	
75	Drain Hose Assy	9377785060	
76	Kit (Insulation Flap Base)	9372672013	
77	Kit (Dew Proof Plate)	9372673010	
78	Catch	9359096009	
79	Pipe Thermistor	9900022020	

INDOOR UNIT
FLOOR / CEILING
ABYG14LVTA
ABYG18LVTA
ABYG18LVTB
Drain pan assy
Evaporator

INDOOR UNIT
FLOOR / CEILING
ABYG14LVTA
Evaporator

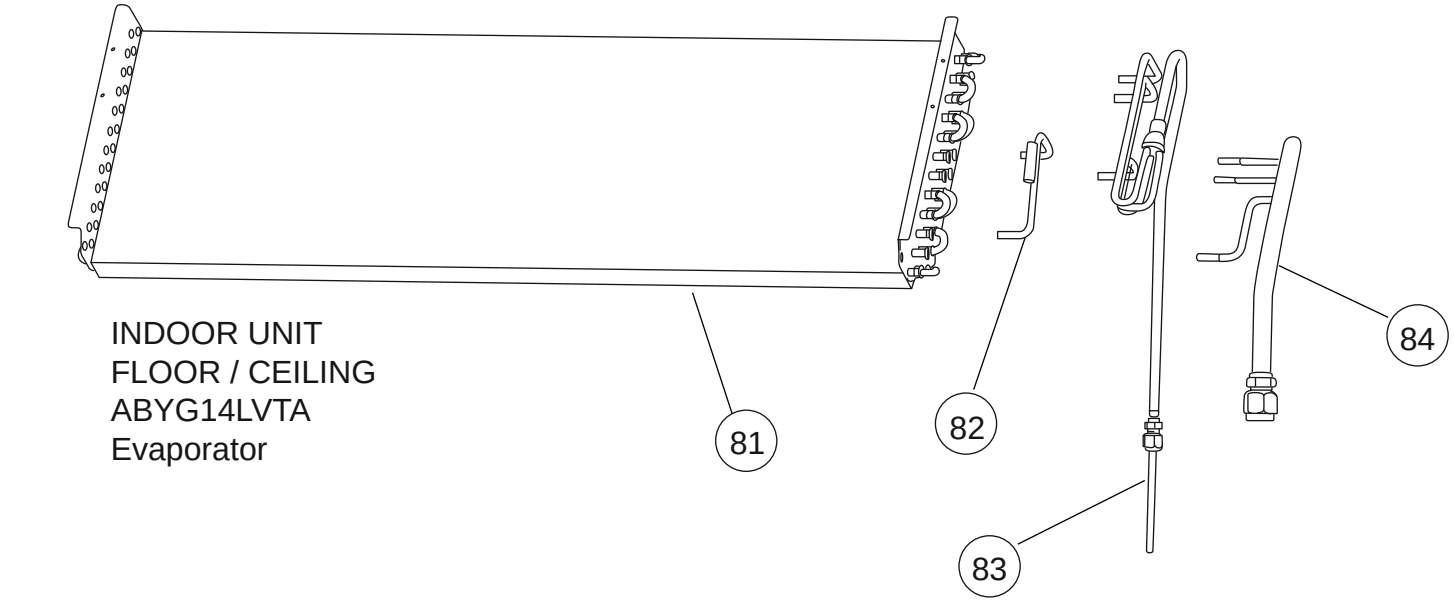

ABYG18LVTA
ABYG18LVTB

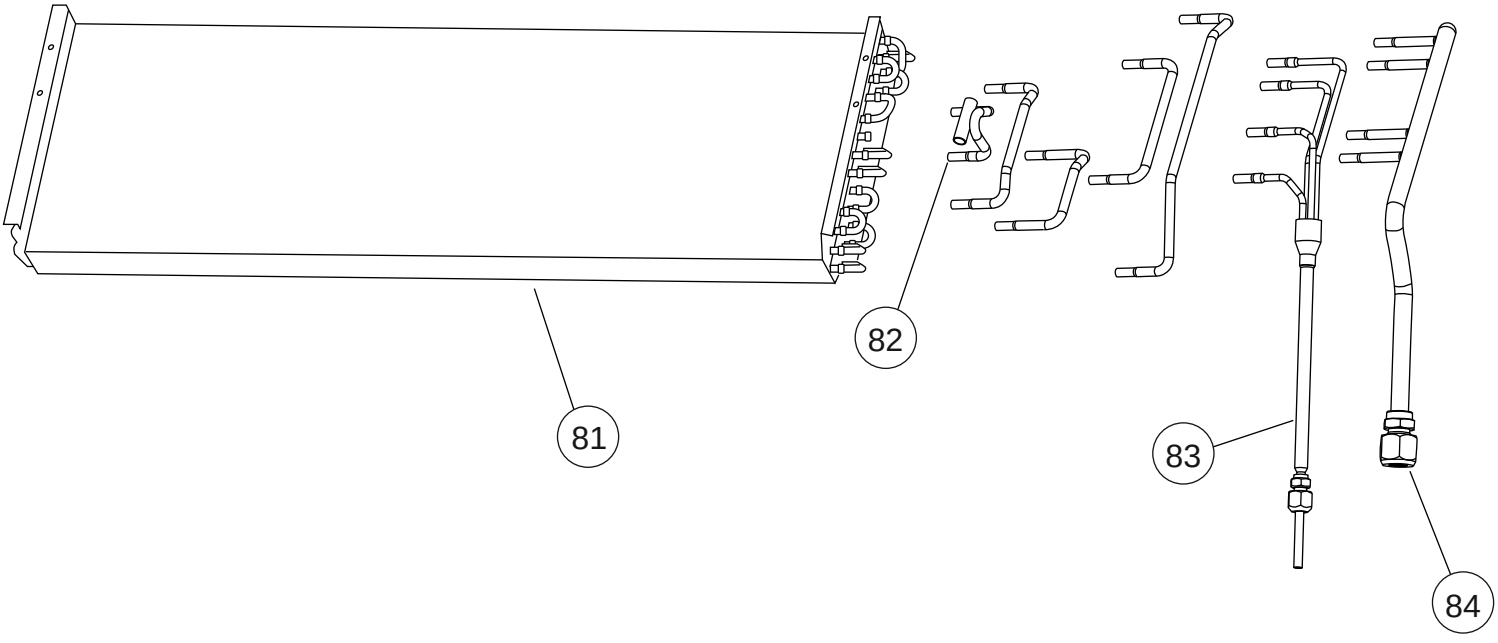

Ref.	Description	Part number		
		ABYG14LVTA	ABYG18LVTA/B	
81	Evaporator Assy	9362513029	9362513043	
82	Bypass Pipe Assy	9373032014	9377819017	
83	Distributor Assy	9373034018	9371325354	
84	Coupling Pipe Assy	9373038061	9373038382	

INDOOR UNIT
FLOOR / CEILING
ABYG14LVTA
ABYG18LVTA
ABYG18LVTB
Fan motor

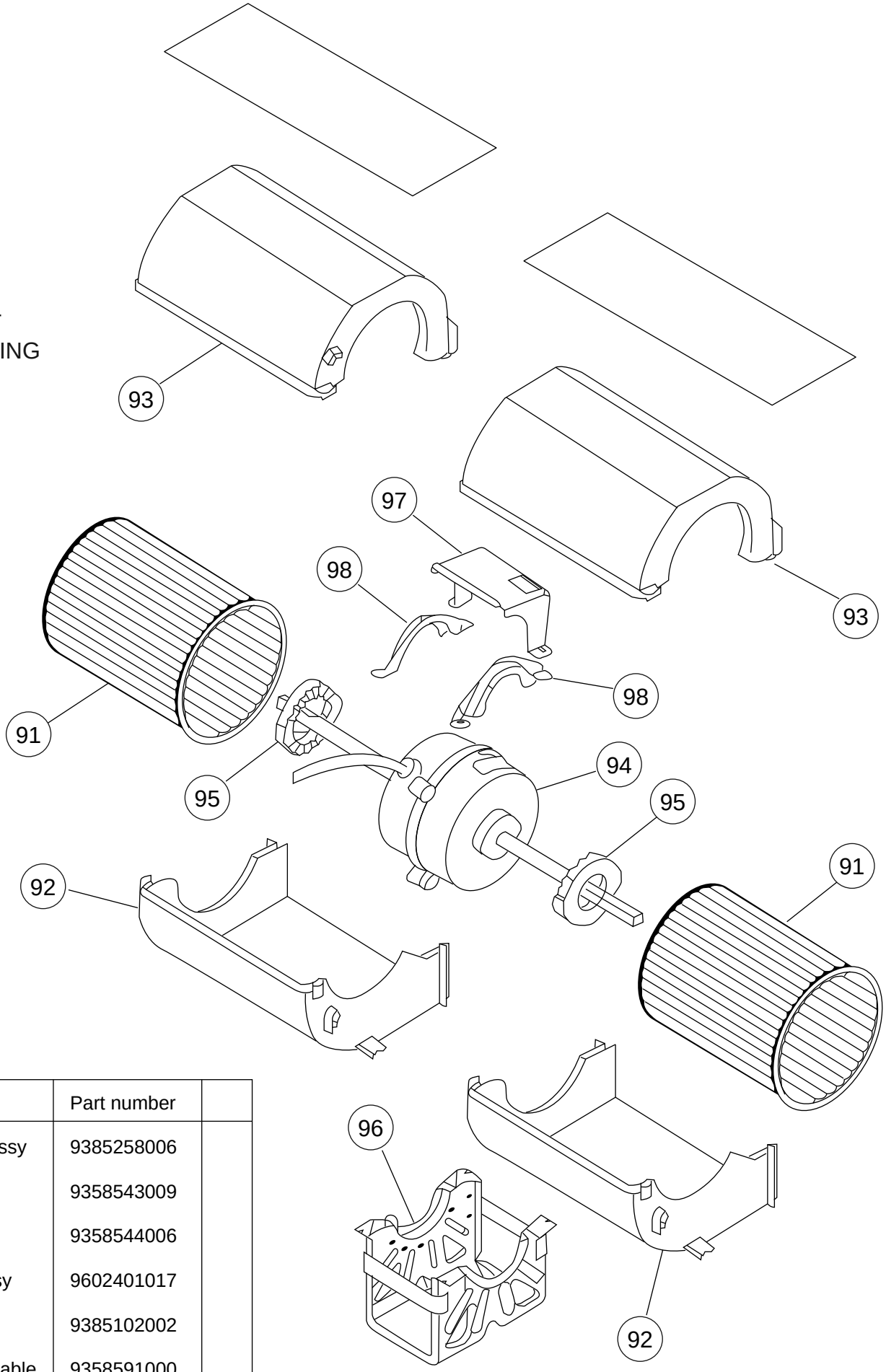

Ref.	Description	Part number	
91	Sirocco Fan Assy	9385258006	
92	Casing	9358543009	
93	Casing Cover	9358544006	
94	Fan Motor Assy	9602401017	
95	Rubber	9385102002	
96	Motor Fixing Table	9358591000	
97	Protector	9359282006	
98	Motor Fixture	9358594001	

INDOOR UNIT
FLOOR / CEILING
ABYG14LVTA
ABYG18LVTA
ABYG18LVTB
Control unit

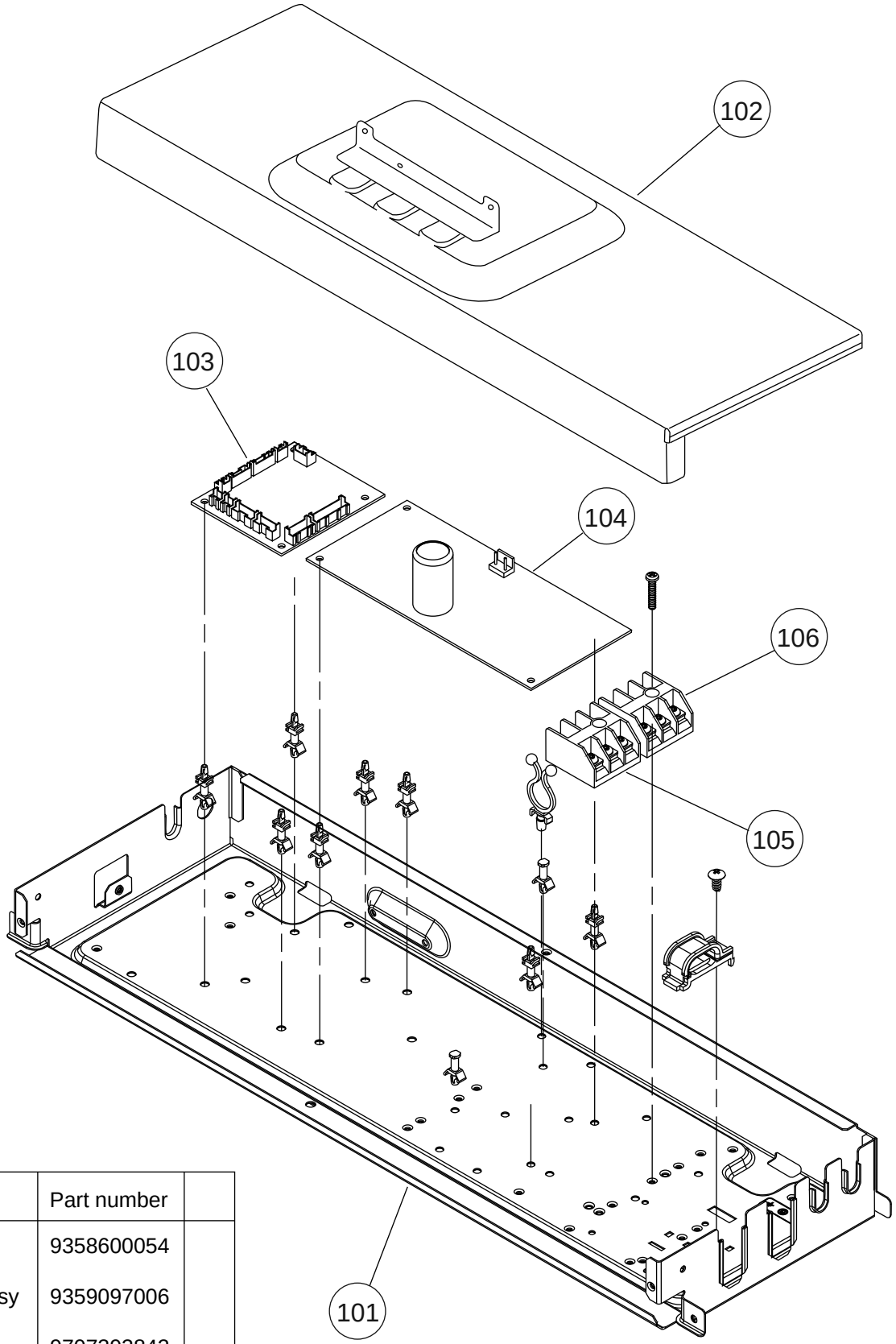

Ref.	Description	Part number	
101	Control Box	9358600054	
102	Control Box Cover Assy	9359097006	
103	Main PCB (14)	9707393842	
103	Main PCB (18LVTA)	9707393859	
103	Main PCB (18LVTB)	9709245361	
104	Power Supply PCB	9707398274	
105	Terminal 3P	9306489045	
106	Terminal 3P	9703345012	
--	Room Thermistor Assy	9703299087	

ACCESSORIES

OUTDOOR UNIT

Name and Shape	Q'ty	Application
Drain pipe 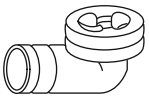	1	For outdoor unit drain piping work (May not be supplied, depending on the model.)
Drain cap 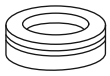	2	
Putty	1	For filling in a gap at the entrance of connection cords.
Adapter G (1/2"→5/8") 12.7mm →15.88mm 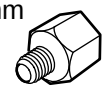	1	For connecting a pipe with different diameter to the outdoor unit.
Adapter D (1/2"→3/8") 12.7mm → 9.52mm	2	

INDOOR UNIT

COMPACT WALL MOUNTED
ASYG07, 09, 12LJCA

Name and Shape	Q'ty
Wall hook bracket 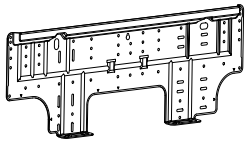	1
Remote control 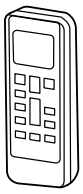	1
Battery	2
Remote control holder	1
Cloth tape 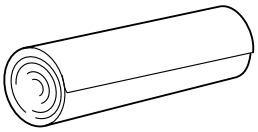	1
Tapping screw (big) 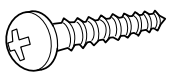	8
Tapping screw (small) 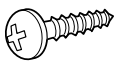	2
Air cleaning filter 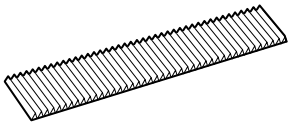	2

COMPACT WALL MOUNTED
ASYG07, 09, 12, 14LUCA

Name and Shape	Q'ty
Wall hook bracket 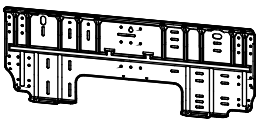	1
Remote control 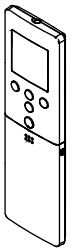	1
Battery	2
Remote control holder 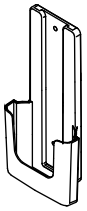	1
Cloth tape 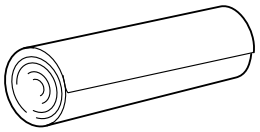	1
Tapping screw (big) 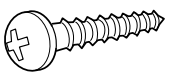	8
Tapping screw (small) 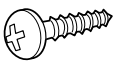	2
Air cleaning filter 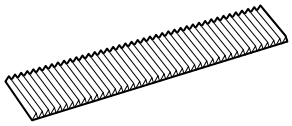	2

WALL MOUNTED
ASYG18, 24LFCA, 24LFCC

Name and Shape	Q'ty
Wall hook bracket 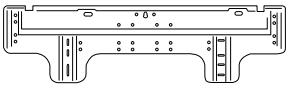	1
Remote control 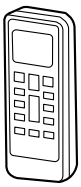	1
Battery	1
Remote control holder 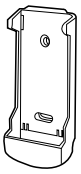	1
Drain hose insulation	1
Cloth tape 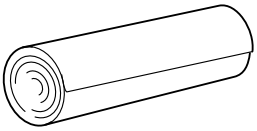	1
Tapping screw (big) 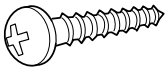	8
Tapping screw (small) 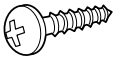	2
Air cleaning filter 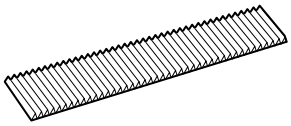	2
Air cleaning filter frame 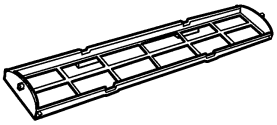	2

INDOOR UNIT
COMPACT WALL MOUNTED
ASYG07, 09, 12, 14LMCA

Name and Shape	Part number
Bracket Panel 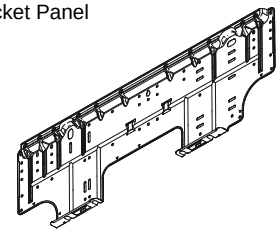	9332882018
Remote Control 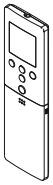	9319208008
Remote Control Holder 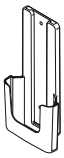	9318912005
Battery (penlight)	0600185541

Name and Shape	Part number
Cloth tape 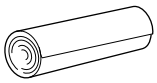	9310519004
Tapping screw (M4 x 25 mm)	0700076046
Tapping screw (M3 x 12 mm)	0700019036
Air cleaning filter assy 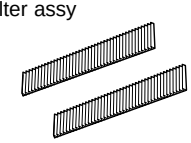	9317250009
Filter holder 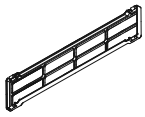	9332911008

OPTIONAL PARTS

Name and Shape	
Wired remote control UTY-RVNYM	
Wired remote control UTY-RNNYM 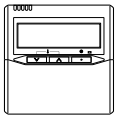	
Simple remote Control UTY-RSNYM	
External connect kit UTY-XWZXZ5 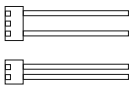	
Communication kit UTY-XCBXZ2 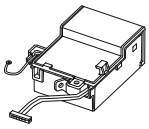	

INDOOR UNIT
COMPACT CASSETTE
AUYG07, 09, 12, 14, 18LVLA
AUYG12, 14, 18LVLB

Name and Shape	Q'ty	Application
Coupler heat insulation (Large)	1	For indoor side pipe joint (Gas pipe)
Coupler heat insulation (Small)	1	For indoor side pipe joint (Liquid pipe)
Special nut A (Large flange)	4	For installing indoor unit
Special nut B (Small flange)	4	For installing indoor unit
Template (Carton top) 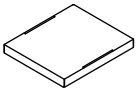	1	For cealing openings cutting Also used as packing
Drain hose 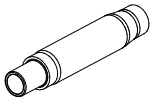	1	For installing drain pipe
Hose Band	1	For installing drain hose
Drain hose insulation 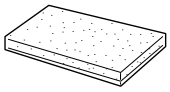	1	For installing drain pipe
Remote controller 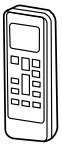	1	For air conditioner operation
Battery	2	For remote controller unit
Remote controller holder	1	For installing the remote controller
Tapping screw (M3 × 12mm)	2	For mounting the remote controller holder
Binder	2	For electrical wiring
Wire clamper 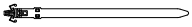	1	For electrical wiring

DECORATION PANEL
UTG-UFYD-W

Name and Shape	Q'ty	Application
Connector cover 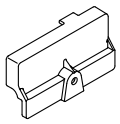	1	For covering connector
Tapping Screw (M5 × 12 mm) 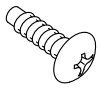	4	For mounting decoration panel
Tapping Screw (M4 × 12 mm)	1	For mounting connector cover
L angle 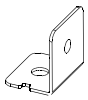	2	For mounting the Hook Wire to the Decoration panel
Hook wire 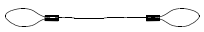	2	For suspending the Decoration panel
Screw [pitch small] (M4 × 10 mm)	2	For mounting the Hook Wire (for metals)
Screw [pitch large] (M4 × 10 mm)	4	For mounting the L angle and Hook wire (for resins)

INDOOR UNIT
FLOOR
AGYG09LVCA
AGYG12LVCA
AGYG14LVCA

Name and Shape	Q'ty
Wall hook bracket 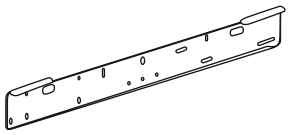	1
Remote control 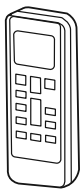	1
Battery 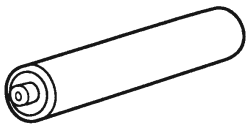	2
Remote control holder 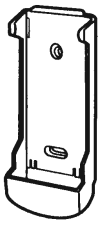	1
Cloth tape	1
Tapping screw (M4 x 25 mm) 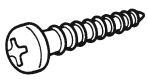	9
Tapping screw (M3 x 12 mm)	2
Air cleaning filter 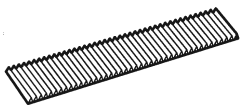	2

INDOOR UNIT
SLIM DUCT
ARYG07LLTA
ARYG09LLTA
ARYG12LLTA
ARYG14LLTA
ARYG18LLTA
ARYG12LLTB
ARYG14LLTB
ARYG18LLTB

Name and Shape	Q'ty	Application
Installation template 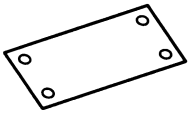	1	For positioning the indoor unit
Washer	8	For installing indoor unit
Coupler heat insulation (Large) 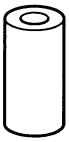	1	For indoor side pipe joint (Large pipe)
Coupler heat insulation (Small)	1	For indoor side pipe joint (Small pipe)
Binder 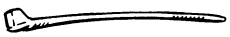	Medium 3	For power supply and remote control cable binding.
	Large 4	For fixing the coupler heat insulation.
Filter (Small) 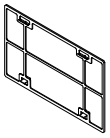	2	(ARYG07LLTA ARYG09LLTA ARYG12LLTA, B ARYG14LLTA, B)
Filter (Big) 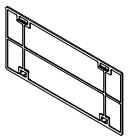	2	(ARYG18LLTA ARYG18LLTB)
Drain hose 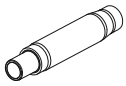	1	For installing drain pipe 3/4 in. (O.D. 1-1/16 in.)
Hose band	1	For installing drain hose
Drain hose insulation B 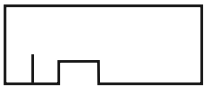	1	Insulates the drain hose
Wired remote control	1	
Remote control cable 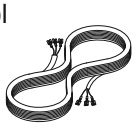	1	For connecting the remote control
Tapping screw (M4 × 16 mm)	2	For installing the remote control

INDOOR UNIT
FLOOR / CEILING
ABYG14LVTA
ABYG18LVTA
ABYG18LVTB

Name and Shape	Q'ty
Screw (M4 × 10mm)	2
Bracket (left) 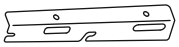 For suspending the indoor unit from ceiling	1
Anchor bolt (M12) 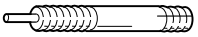 For suspending the indoor unit from ceiling	4
Special nut For suspending the indoor unit from ceiling	4
Screw (M4 × 20mm) For fixing the wall bracket	6
Coupler heat insulator (Small) For indoor side pipe joint (Small pipe)	1
Binder(Small) For electrical wiring	2
Drain hose	1
Insulation (Drain hose) 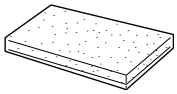 Adhesive type 100 x 220 mm	1
Remote control 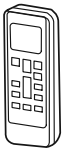 For air conditioner operation	1
Remote control holder	1

Name and Shape	Q'ty
Installation template 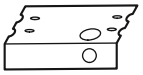 Positioning for under ceiling type	1
Bracket (right) 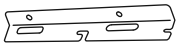 For suspending the indoor unit from ceiling	1
Spring washer For suspending the indoor unit from ceiling	4
Wall bracket For suspending the indoor unit on the wall	2
Coupler heat insulator (Large) For indoor side pipe joint(Large pipe)	1
Binder(Large) For fixing the drain hose	1
Wire clamper 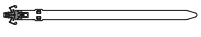 For electrical wiring	1
Hose Band For installing drain hose	1
VT wire For fixing the drain hose L 280 mm	1
Battery 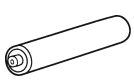 For remote control	2
Screw (M3 × 12mm) For remote control holder installation	2